1. ALL RESISTANCE VALUES ARE IN OHMS, 0.1 WATT +/- 5%.
2. ALL CAPACITANCE VALUES ARE IN MICROFARADS.
3. ALL CRYSTALS & OSCILLATOR VALUES ARE IN HERTZ.

X1536 MLB_COFFEE SCHEMATIC

REV	ECN	DESCRIPTION OF REVISION	CK APPD / DATE
4	0015536938	ENGINEERING RELEASED	2018-12-20

PAGE		CONTENTS	SYNC	DATE
1	1	TABLE OF CONTENTS		
2	2	SYSTEM PCB SUMMARY		
3	4	PD PARTS	J213_ANDRES	07/31/2018
4	5	CPU GFX	J213_AITKEN	08/23/2018
5	6	CPU MISC/JTAG/CFG/RSVD	J213_AITKEN	12/10/2018
6	7	CPU LPDDR3 INTERFACE	J213_AITKEN	08/23/2018
7	8	CPU & PCH POWER	J213_AITKEN	12/19/2018
8	9	CPU & PCH GROUNDS	J213_AITKEN	08/23/2018
9	10	CPU CORE DECOUPLING	J213_AITKEN	08/23/2018
10	11	CPU GT DECOUPLING	J213_AITKEN	08/23/2018
11	12	PCH DECOUPLING	J213_AITKEN	12/11/2018
12	13	PCH AUDIO/LPC/SPI/SMBUS	J213_AITKEN	12/14/2018
13	14	PCH POWER MANAGEMENT	J213_AITKEN	08/23/2018
14	15	PCH PCIE/USB/CLKS	J213_AITKEN	09/18/2018
15	16	PCH SPI/UART/GPIO	J213_AITKEN	08/23/2018
16	18	CPU/PCH MERGED XDP	J213_AITKEN	08/13/2018
17	19	CHIPSET SUPPORT 1	J213_AITKEN	08/13/2018
18	20	CHIPSET SUPPORT 2	J213_AITKEN	12/10/2018
19	22	LPDDR3 VREF MARGINING	J213_JOHN	06/05/2018
20	23	LPDDR3 DRAM CHANNEL A (00-31)	J213_KEI	09/10/2018
21	24	LPDDR3 DRAM CHANNEL A (32-63)	J213_KEI	09/10/2018
22	25	LPDDR3 DRAM CHANNEL B (00-31)	J213_KEI	09/10/2018
23	26	LPDDR3 DRAM CHANNEL B (32-63)	J213_KEI	09/10/2018
24	27	LPDDR3 DRAM TERMINATION	J213_JOHN	06/05/2018
25	28	USB-C HIGH SPEED 1	J213_AMAN	09/18/2018
26	29	USB-C HIGH SPEED 2	J213_AMAN	09/18/2018
27	30	USB-C SUPPORT	J213_AMAN	09/19/2018
28	31	USB-C PORT CONTROLLER A	J213_AMAN	09/19/2018
29	32	USB-C PORT CONTROLLER B	J213_AMAN	08/23/2018
30	33	USB-C CONNECTOR A	J213_AMAN	08/23/2018
31	36	WIFI/BT SUPPORT	J213_METE	07/30/2018
32	37	WIFI/BT MODULE 1	J213_METE	12/03/2018
33	38	WIFI/BT MODULE 2	J213_METE	07/30/2018
34	39	SOC GPIO/SEP/USB/DDR/TEST	J213_KEI	09/11/2018
35	40	SOC AOP/AON/SMC	J213_KEI	12/06/2018
36	41	SOC ISP/I2C/UART/SPI/I2S	J213_KEI	09/11/2018
37	42	SOC PCIE	J213_KEI	09/11/2018
38	43	SOC POWER 1	J213_KEI	09/11/2018
39	44	SOC POWER 2	J213_KEI	09/11/2018
40	45	SOC POWER 3	J213_KEI	09/11/2018
41	46	SOC GROUND	J213_KEI	12/11/2018
42	47	SOC SHARED SUPPORT	J213_KEI	12/11/2018
43	48	SOC PROJECT SUPPORT	J213_KEI	12/10/2018
44	49	T151	J213_AMAN	11/05/2018
45	50	SECURE ELEMENT	J213_KEI	09/11/2018
46	51	T139 SUPPORT	J213_AMAN	08/23/2018
47	52	I2C CONNECTIONS 1	J213_WUDI	09/17/2018
48	53	I2C CONNECTIONS 2	J213_WUDI	09/17/2018
49	54	POWER SENSORS HIGH SIDE	J213_KEI	11/05/2018
50	55	POWER SENSORS LOAD SIDE	J213_KEI	11/05/2018
51	56	POWER SENSORS EXTENDED	J213_KEI	12/06/2018
52	57	POWER SENSORS EXTENDED 2	J213_KEI	12/11/2018
53	58	THERMAL SENSORS	J213_KEI	10/19/2018
54	59	POWER SENSORS EXTENDED 3	J213_KEI	11/05/2018
55	60	FANS/SMC/AMUX SUPPORT	J213_KEI	05/31/2018
56	62	AUDIO PLACEHOLDER	J213_MLB_0P158	05/29/2018
57	63	AUDIO JACK CODEC	J213_MLB_0P158	05/29/2018
58	64	AUDIO LEFT AMPLIFIERS	J213_TROY	12/11/2018
59	65	AUDIO RIGHT AMPLIFIERS	J213_TROY	12/11/2018
60	66	AUDIO FLEX CONNECTORS	J213_KEI	11/26/2018
61	67	KEYBOARD & TRACKPAD 1	J213_AMAN	11/05/2018
62	68	KEYBOARD & TRACKPAD 2	J213_AMAN	08/23/2018
63	69	BATTERY CONN, 3V3 G3H RTC VR	J213_AITKEN	10/22/2018
64	70	PBUS SUPPLY & BATTERY CHARGER	J213_AITKEN	09/18/2018
65	71	VR CORE & SA IMVP CTRL	J213_KEI	09/10/2018
66	72	VR CORE & SA IMVP	J213_KEI	09/10/2018
67	74	VR GT & GTX IMVP	J213_KEI	09/10/2018
68	76	VR 5V, 3V3	J213_JOHN	06/12/2018
69	77	VR EOPIO EDRAM	J213_KEI	09/10/2018
70	78	PMIC BUCKS AND SWS	J213_KEI	11/05/2018
71	79	PMIC LDOS	J213_KEI	10/19/2018
72	80	PMIC GPIOS & CONTROL	J213_KEI	12/19/2018
73	81	VR VDDQ VCCIO	J213_KEI	09/10/2018
74	82	POWER FETS	J213_KEI	09/11/2018
75	84	LCD BACKLIGHT DRIVER	J213_MLB_0P158	05/29/2018
76	85	EDP DISPLAY CONNECTOR	J213_AITKEN	12/11/2018
77	86	S4E<0>	J213_WUDI	09/18/2018
78	87	S4E<1>	J213_WUDI	09/18/2018
79	88	S4E<2>	J213_WUDI	09/18/2018
80	89	S4E<3>	J213_WUDI	09/18/2018
81	90	OCARINA PMIC & NAND VCC VR & VDDIO1 SWCH	J213_WUDI	12/19/2018
82	96	SSD SUPPORT	J213_WUDI	12/19/2018
83	124	FCT	J213_KEI	11/15/2018
84	125	PROBE POINTS	J213_KELVIN	09/24/2018
85	135	DESENSE 1	J213_KELVIN	09/13/2018
86	136	DESENSE 2	J213_KELVIN	09/13/2018
87	137	DESENSE 3	J213_KELVIN	09/12/2018
88	138	DESENSE 4	J213_KELVIN	09/12/2018
89	140	DEV SUPPORT 1	J213_WUDI	12/10/2018
90	141	DEV SUPPORT 2	J213_WUDI	08/23/2018
91	400	BOM CONFIGURATION	J213_JOHN	06/05/2018
92	401	BOM CONFIGURATION	J213_JOHN	06/05/2018
93	403	BOM GROUPS	J213_JOHN	06/05/2018
94	405	BOM VARIANT TABLES	J213_JOHN	06/05/2018
95	406	BOM VARIANT TABLES	J213_JOHN	06/05/2018
96	407	BOM VARIANT TABLES	J213_JOHN	06/05/2018
97	410	BOM ALTERNATES	J213_JOHN	06/05/2018
98	500	BOARD RULES	J213_JOHN	06/05/2018

LAST_MODIFICATION=Thu Dec 20 10:46:56 2018

FAB#MB108

SCHEM,MLB COFFEE,X1536

Apple Inc.

DRAWING NUMBER 051-04273 SIZE D

REVISION 4.0.0

BRANCH evt-1

PAGE 1 OF 500

SHEET 1 OF 98

NOTICE OF PROPRIETARY PROPERTY:
THE INFORMATION CONTAINED HEREIN IS THE PROPRIETARY PROPERTY OF APPLE INC.
THE POSESSOR AGREES TO THE FOLLOWING:
I TO MAINTAIN THIS DOCUMENT IN CONFIDENCE
II NOT TO REPRODUCE OR COPY IT
III NOT TO REVEAL OR PUBLISH IT IN WHOLE OR PART
IV ALL RIGHTS RESERVED

DESIGN	DESCRIPTION	SCHEMATIC	BOARD	MCO	PANEL
J213/MLB_COFFEE	POR CFL MLB	051-04273	820-01598	056-07680-16	057-01595
J213/FLEX_AUDIOJACK	AUDIO JACK, AMR, AND MESA	051-04122	821-02091	056-07548-15	N/A
J680/FLEX_USBC	LEFT SIDE USB TONGUE FLEX	051-03140	821-01646	056-05483-A	N/A
J132/FLEX_BMU_SIGNAL	SIGNALS TO BMU	051-03342	821-01726	056-05589-A	N/A
J79/FLEX_BMU_PWR	POWER TO/FROM BMU	051-00927	821-00447	056-02301-A	N/A
J130/FLEX_TCON_MLB	DISPLAYPORT FROM MLB TO TCON	051-01199	821-00586	056-02785-07	N/A
J213/FLEX_TRACKPAD	MLB TO TRACKPAD	051-04335	821-02218	056-07655-05	N/A
J130/FLEX_KB_3D	KB FLEX FOR ALL 3 KB TYPES	051-02011	821-01046	056-03725-B	N/A
J213/FLEX_3MIC	MIC FLEX	051-04441	821-02265	056-07754-17	N/A
J79/GRAPE_FLEX	DFR TOUCH FLEX	051-01338	821-00681	056-02220-A	N/A
DFR DAUGHTER FLEX	DFR DAUGHTER FLEX	VENDOR	VENDOR	099-14398	N/A
J213/DEV_MLB_COUPON	IMPEDENCE COUPON	951-08932	920-06560	998-16565-01	057-01595

www.laptop-schematics.com

FAB#MB108

PAGE TITLE
SYSTEM PCB SUMMARY

Apple Inc.

DRAWING NUMBER 051-04273
SIZE D
REVISION 4.0.0
BRANCH evt-1
PAGE 2 OF 500
SHEET 2 OF 98

NOTICE OF PROPRIETARY PROPERTY:
THE INFORMATION CONTAINED HEREIN IS THE PROPRIETARY PROPERTY OF APPLE INC.
THE POSESSOR AGREES TO THE FOLLOWING:
I TO MAINTAIN THIS DOCUMENT IN CONFIDENCE
II NOT TO REPRODUCE OR COPY IT
III NOT TO REVEAL OR PUBLISH IT IN WHOLE OR PART
IV ALL RIGHTS RESERVED

TOP SIDE STANDOFFS

OMIT_TABLE
Z0400
2.80D1.2ID-1.44H-SM
CRITICAL
860-01216
SOUTH OF NAND

OMIT_TABLE
Z0401
2.80D1.2ID-1.44H-SM
CRITICAL
860-01216
NORTH OF NAND

OMIT_TABLE
Z0402
2.80D1.2ID-1.44H-SM
CRITICAL
860-01216
NORTH OF NAND

OMIT_TABLE
Z0404
2.80D1.2ID-1.44H-SM
CRITICAL
860-01216
FAR SIDE NEAR AJ CONN

OMIT_TABLE
Z0405
2.80D1.2ID-1.44H-SM
CRITICAL
860-01216
SOUTH OF NAND ALIGNED WITH
BOTTOM SIDE STANDOFF

OMIT_TABLE
Z0406
2.80D1.2ID-1.44H-SM
CRITICAL
860-01216
CORNER OF NAND CLOSEST
TO CPU

BOTTOM SIDE TALL STANDOFF

OMIT_TABLE
Z0460
2.80D1.2ID-3.0H-SM
CRITICAL
860-01215
SOUTH OF NAND ALIGNED WITH
TOP SIDE STANDOFF

USB-C BOSS

CRITICAL
Z0420
3.40D1.75ID-1.12H-SM
860-00392

CRITICAL
Z0421
3.40D1.75ID-1.12H-SM
860-00392

DFR BOSS

CRITICAL
Z0430
6.25X3.85R-1.75ID-1.865H-SM
860-01256

TRACKPAD BOSS

CRITICAL
Z0440
3.50D1.85ID-1.41H-SM
860-00381

CRITICAL
Z0441
3.50D1.85ID-1.41H-SM
860-00381

DISPLAY BOSS

CRITICAL
Z0450
2.7X1.8R-1.4ID-0.91H-SM
860-00469

CRITICAL
Z0451
2.7X1.8R-1.4ID-0.91H-SM
860-00469

AJ FLEX COWLING BOSS

CRITICAL
Z0470
3.50D1.85ID-1.92H-SM
860-00382

POGO PINS BACKLIGHT

CRITICAL
PP0400
POGO-2.30D-4.06H-SM
SM
870-01772

POGO PIN DISPLAY

CRITICAL
PP0420
POGO-2.30D-4.0H-SM
SM
870-01518

POGO PINS DRAM

CRITICAL
PP0410
POGO-2.30D-4.0H-SM
SM
870-01518

CRITICAL
PP0411
POGO-2.30D-4.0H-SM
SM
870-01518

POGO PIN FAN

CRITICAL
PP0430
POGO-2.30D-4.0H-SM
SM
870-01518

POGO PIN HEAT PIPE

CRITICAL
PP0499
POGO-2.30D-4.0H-SM
SM
870-01518

MLB MTG HOLES 2.1X3.36 MM

CRITICAL
ZT0420
TH-NSP
SL-3.36X2.1-5.86X4.6
998-03823
NEAR KEYBOARD CONNECTOR

CRITICAL
ZT0421
TH-NSP
SL-3.36X2.1-5.86X4.6
998-03823
NEAR TRACKPAD CONNECTOR

CPU THERM STAGE HOLES 3.15 MM

CRITICAL
ZT0400
3P0R3P15
998-0845
CORNER NEAREST KEYBOARD

CPU THERM STAGE HOLES 3.6 MM

CRITICAL
ZT0401
4.0R3.6-NSP
998-03850

CRITICAL
ZT0402
4.0R3.6-NSP
998-03850

CRITICAL
ZT0403
4.0R3.6-NSP
998-03850

FAN MTG HOLE 2.0X2.6 MM

CRITICAL
ZT0430
TH-NSP
SL-2.6X2.0-4.7X4.1
998-03974

SHIELD CAN ALIGNMENT SLOTS DRAM

CRITICAL
SL0490
TH-NSP
SL-1.2X0.4-1.5X0.7
998-04440

CRITICAL
SL0491
TH-NSP
SL-1.2X0.4-1.5X0.7
998-04440

2X PLATED SLOTS IN MEM AREA DUE TO
SPACE CONSTRAINTS <RDAR://44382678>
ALL OTHER SHIELD ALIGNMENT SLOTS ARE
NPTH + GND RING FOR BETTER TOLERANCE

USB-C SHIELD

806-19049	1	SHIELD CAN,HOLES,TITAN RIDGE,X1533	USBC_CAN	CRITICAL	USBC_CAN
870-07967	1	TAPE,COND,TITANRIDGE,CAN,X1533	USBC_CAN_TAPE	CRITICAL	USBC_CAN_TAPE
806-18559	1	FENCE,TITAN RIDGE,X1533	USBC_FENCE	CRITICAL	USBC_FENCE
870-07841	1	TAPE,COND,TITANRIDGE,MLB,BTM,X1533	USBC_FENCE_TAPE	CRITICAL	USBC_FENCE_TAPE

MEGA SHIELD

806-19050	1	SHIELD CAN,HOLES,MEGA,X1533	MEGA_CAN	CRITICAL	MEGA_CAN
870-07968	1	TAPE,COND,MEGA,CAN,X1533	MEGA_CAN_TAPE	CRITICAL	MEGA_CAN_TAPE
806-18561	1	FENCE,MEGA,X1533	MEGA_FENCE	CRITICAL	MEGA_FENCE
870-07842	1	TAPE,COND,MEGA,MLB,BTM,X1533	MEGA_FENCE_TAPE	CRITICAL	MEGA_FENCE_TAPE

DRAM SHIELD TOP

806-19048	1	SHIELD CAN,HOLES,DRAM,UNIV,X1533	DRAM_TOP_CAN	CRITICAL	DRAM_TOP_CAN
870-07966	1	TAPE,COND,DRAM,CAN,X1533	DRAM_TOP_CAN_TAPE	CRITICAL	DRAM_TOP_CAN_TAPE
806-18560	1	FENCE,DRAM,UNIV,X1533	DRAM_TOP_FENCE	CRITICAL	DRAM_TOP_FENCE
870-07840	1	TAPE,COND,DRAM,UNIV,X1533	DRAM_TOP_FENCE_TAPE	CRITICAL	DRAM_TOP_FENCE_TAPE

DRAM SHIELD BOTTOM

806-19048	1	SHIELD CAN,HOLES,DRAM,UNIV,X1533	DRAM_BOT_CAN	CRITICAL	DRAM_BOT_CAN
870-07966	1	TAPE,COND,DRAM,CAN,X1533	DRAM_BOT_CAN_TAPE	CRITICAL	DRAM_BOT_CAN_TAPE
806-18560	1	FENCE,DRAM,UNIV,X1533	DRAM_BOT_FENCE	CRITICAL	DRAM_BOT_FENCE
870-07840	1	TAPE,COND,DRAM,UNIV,X1533	DRAM_BOT_TAPE	CRITICAL	DRAM_BOT_TAPE

TOP SIDE STANDOFFS

860-01216	16	BOSS,STANDOFF,MLB,X1533	Z0400-Z0402,Z0404-Z0406	CRITICAL	

BOTTOM SIDE STANDOFFS

860-01215	1	BOSS,STANDOFF,MLB,TALL,X1533	Z0460	CRITICAL	

BOM_COST_GROUP=MECHANICALS

FAB#MB108

SYNC_MASTER=J213_ANDRES SYNC_DATE=07/31/2018

PAGE TITLE
PD PARTS

Apple Inc.

DRAWING NUMBER 051-04273
SIZE D
REVISION 4.0.0

NOTICE OF PROPRIETARY PROPERTY:
THE INFORMATION CONTAINED HEREIN IS THE
PROPRIETARY PROPERTY OF APPLE INC.
THE POSESSOR AGREES TO THE FOLLOWING:
I TO MAINTAIN THIS DOCUMENT IN CONFIDENCE
II NOT TO REPRODUCE OR COPY IT
III NOT TO REVEAL OR PUBLISH IT IN WHOLE OR PART
IV ALL RIGHTS RESERVED

BRANCH evt-1
PAGE 4 OF 500
SHEET 3 OF 98

www.laptop-schematics.com

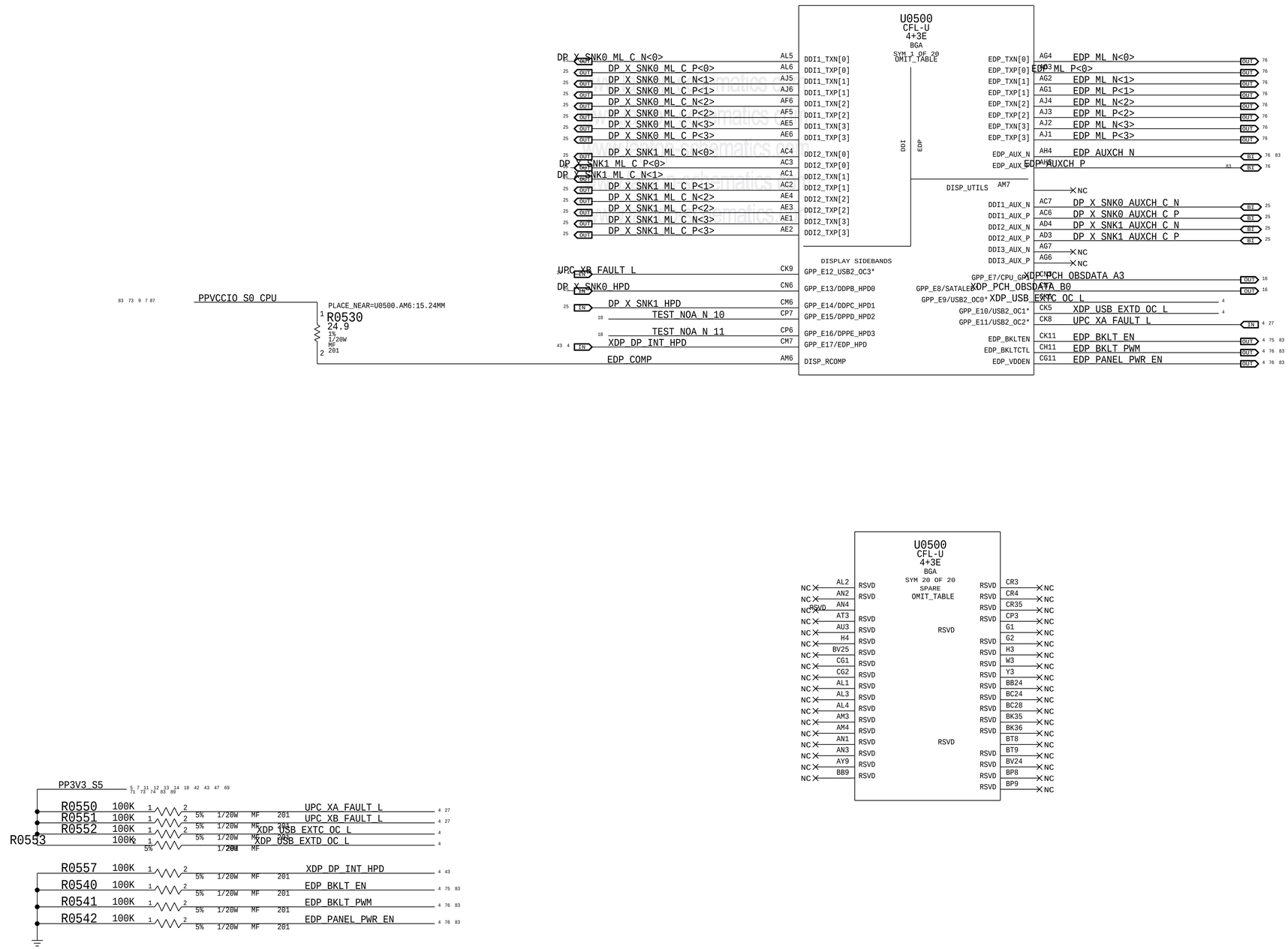

BOM_COST_GROUP=CPU & CHIPSET

PAGE TITLE
CPU GFX

Apple Inc.

DRAWING NUMBER 051-04273
SIZE D
REVISION 4.0.0
BRANCH evt-1
PAGE 5 OF 500
SHEET 4 OF 98

NOTICE OF PROPRIETARY PROPERTY:
THE INFORMATION CONTAINED HEREIN IS THE PROPRIETARY PROPERTY OF APPLE INC.
THE POSESSOR AGREES TO THE FOLLOWING:
I TO MAINTAIN THIS DOCUMENT IN CONFIDENCE
II NOT TO REPRODUCE OR COPY IT
III NOT TO REVEAL OR PUBLISH IT IN WHOLE OR PART
IV ALL RIGHTS RESERVED

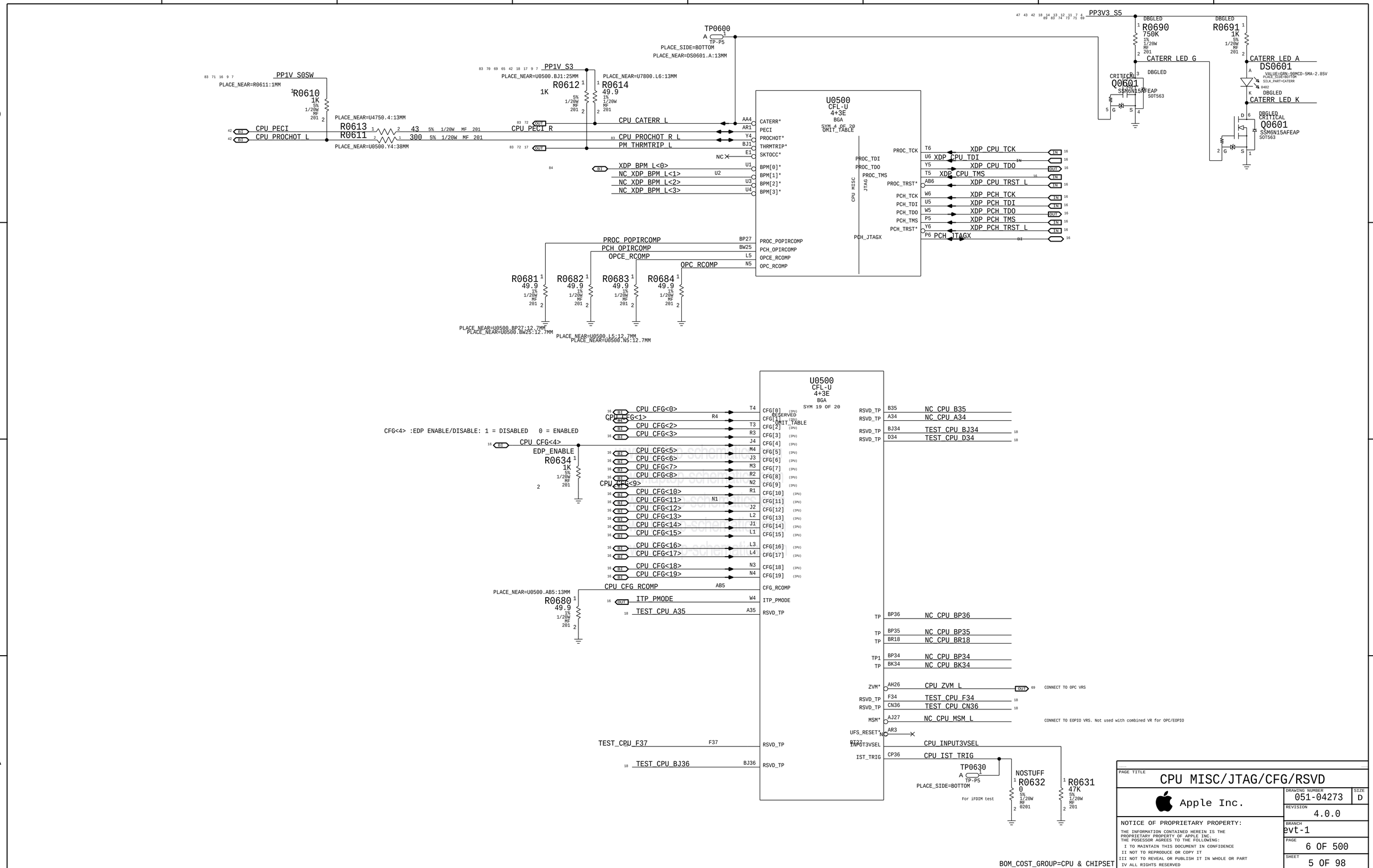
U0500
CFL-U
4+3E
BGA
SYM 4 OF 20
OMIT_TABLE
CATERR*
PECI
PROCHOT*
THRMTRIP*
SKTOCC*
BPM[0]*
BPM[1]*
BPM[2]*
BPM[3]*
PROC_POPIRCOMP
PCH_OPIRCOMP
OPCE_RCOMP
OPC_RCOMP
PROC_TDI
PROC_TDO
PROC_TMS
PROC_TRST*
PCH_TCK
PCH_TDI
PCH_TDO
PCH_TMS
PCH_TRST*
PCH_JTAGX
CPU MISC
JTAG
CPU_CATERR_L
CPU_PECI_R
CPU_PROCHOT_R_L
PM_THRMTRIP_L
XDP_BPM_L<0>
NC_XDP_BPM_L<1>
NC_XDP_BPM_L<2>
NC_XDP_BPM_L<3>
PROC_POPIRCOMP
PCH_OPIRCOMP
OPCE_RCOMP
OPC_RCOMP
XDP_CPU_TCK
XDP_CPU_TDI
XDP_CPU_TDO
XDP_CPU_TMS
XDP_CPU_TRST_L
XDP_PCH_TCK
XDP_PCH_TDI
XDP_PCH_TDO
XDP_PCH_TMS
XDP_PCH_TRST_L
PCH_JTAGX
TP0600
TP-P5
PLACE_SIDE=BOTTOM
PLACE_NEAR=DS0601.A:13MM
PP1V_S0SW
PLACE_NEAR=R0611:1MM
R0610
1K
PP1V_S3
PLACE_NEAR=U0500.BJ1:25MM
R0612
1K
PLACE_NEAR=U7800.L6:13MM
R0614
49.9
PLACE_NEAR=U4750.4:13MM
R0613
43
R0611
300
PLACE_NEAR=U0500.Y4:38MM
CPU_PECI
CPU_PROCHOT_L
R0681
R0682
R0683
R0684
49.9
PLACE_NEAR=U0500.BP27:12.7MM
PLACE_NEAR=U0500.BW25:12.7MM
PLACE_NEAR=U0500.L5:12.7MM
PLACE_NEAR=U0500.N5:12.7MM
PP3V3_S5
R0690
750K
R0691
1K
CATERR_LED_G
CATERR_LED_A
DS0601
VALUE=GRN-80MCD-5MA-2.85V
PLACE_SIDE=BOTTOM
SILK_PART=CATERR
0402
CATERR_LED_K
DBGLED
CRITICAL
Q0601
SSM6N15AFEAP
SOT563
U0500
CFL-U
4+3E
BGA
SYM 19 OF 20
OMIT_TABLE
CFG[0]
CFG[1]
CFG[2]
CFG[3]
CFG[4]
CFG[5]
CFG[6]
CFG[7]
CFG[8]
CFG[9]
CFG[10]
CFG[11]
CFG[12]
CFG[13]
CFG[14]
CFG[15]
CFG[16]
CFG[17]
CFG[18]
CFG[19]
CFG_RCOMP
ITP_PMODE
RSVD_TP
CPU_CFG<0>
CPU_CFG<1>
CPU_CFG<2>
CPU_CFG<3>
CPU_CFG<4>
CPU_CFG<5>
CPU_CFG<6>
CPU_CFG<7>
CPU_CFG<8>
CPU_CFG<9>
CPU_CFG<10>
CPU_CFG<11>
CPU_CFG<12>
CPU_CFG<13>
CPU_CFG<14>
CPU_CFG<15>
CPU_CFG<16>
CPU_CFG<17>
CPU_CFG<18>
CPU_CFG<19>
CFG<4> :EDP ENABLE/DISABLE: 1 = DISABLED 0 = ENABLED
EDP_ENABLE
R0634
1K
CPU_CFG_RCOMP
PLACE_NEAR=U0500.AB5:13MM
R0680
49.9
ITP_PMODE
TEST_CPU_A35
TEST_CPU_F37
TEST_CPU_BJ36
RSVD_TP
NC_CPU_B35
NC_CPU_A34
TEST_CPU_BJ34
TEST_CPU_D34
NC_CPU_BP36
NC_CPU_BP35
NC_CPU_BR18
NC_CPU_BP34
NC_CPU_BK34
CPU_ZVM_L
CONNECT TO OPC VRS
TEST_CPU_F34
TEST_CPU_CN36
NC_CPU_MSM_L
CONNECT TO EOPIO VRS. Not used with combined VR for OPC/EOPIO
UFS_RESET*
CPU_INPUT3VSEL
CPU_IST_TRIG
TP0630
TP-P5
PLACE_SIDE=BOTTOM
For iFDIM test
NOSTUFF
R0632
0
R0631
47K
BOM_COST_GROUP=CPU & CHIPSET
PAGE TITLE
CPU MISC/JTAG/CFG/RSVD
Apple Inc.
DRAWING NUMBER
051-04273
SIZE
D
REVISION
4.0.0
BRANCH
evt-1
PAGE
6 OF 500
SHEET
5 OF 98
NOTICE OF PROPRIETARY PROPERTY:
THE INFORMATION CONTAINED HEREIN IS THE PROPRIETARY PROPERTY OF APPLE INC.
THE POSESSOR AGREES TO THE FOLLOWING:
I TO MAINTAIN THIS DOCUMENT IN CONFIDENCE
II NOT TO REPRODUCE OR COPY IT
III NOT TO REVEAL OR PUBLISH IT IN WHOLE OR PART
IV ALL RIGHTS RESERVED

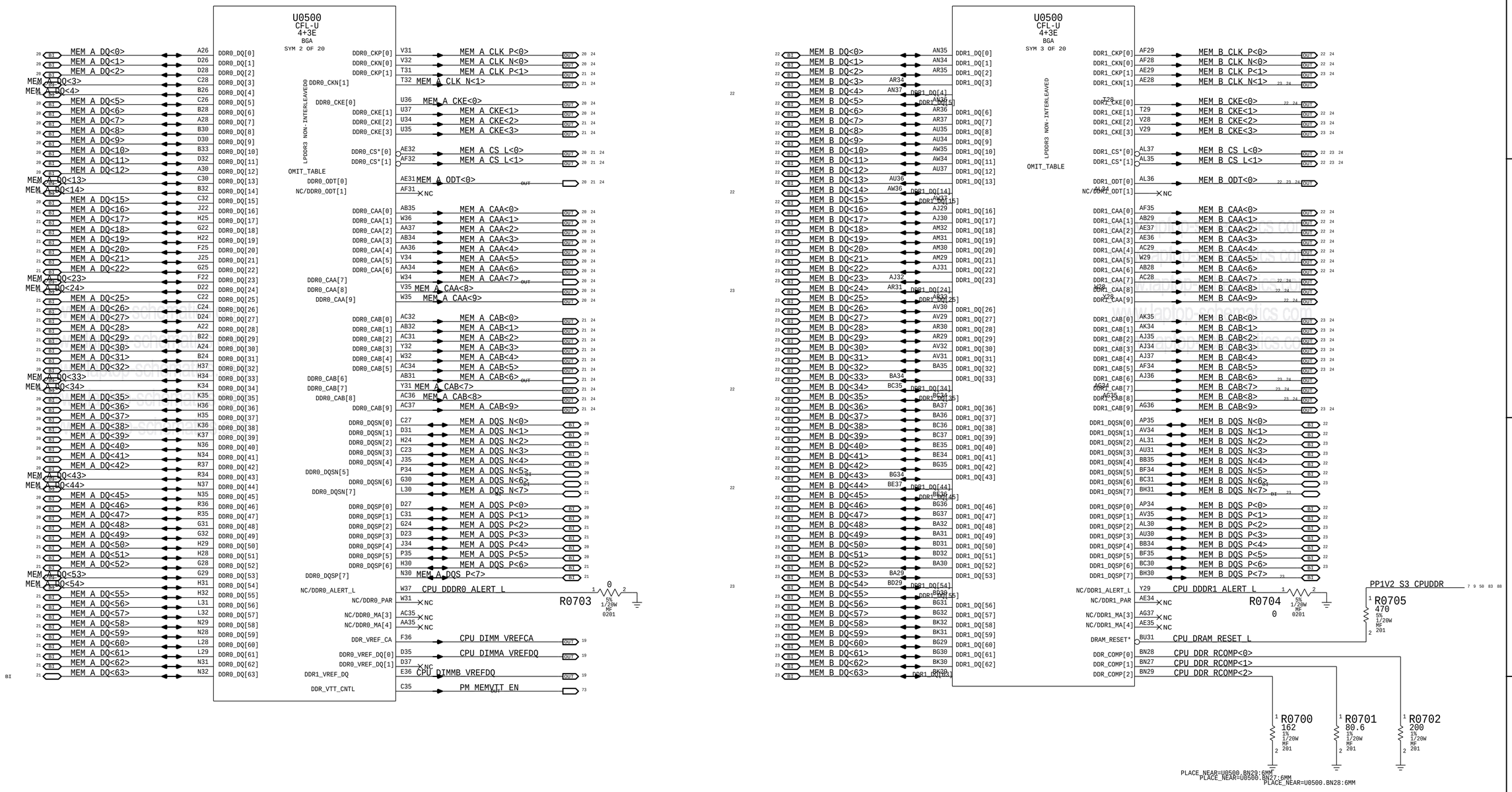

BOM_COST_GROUP=CPU & CHIPSET

PAGE TITLE

CPU LPDDR3 INTERFACE

Apple Inc.

DRAWING NUMBER 051-04273 | SIZE D

REVISION 4.0.0

BRANCH evt-1

PAGE 7 OF 500

SHEET 6 OF 98

NOTICE OF PROPRIETARY PROPERTY:
THE INFORMATION CONTAINED HEREIN IS THE PROPRIETARY PROPERTY OF APPLE INC. THE POSESSOR AGREES TO THE FOLLOWING:
I TO MAINTAIN THIS DOCUMENT IN CONFIDENCE
II NOT TO REPRODUCE OR COPY IT
III NOT TO REVEAL OR PUBLISH IT IN WHOLE OR PART
IV ALL RIGHTS RESERVED

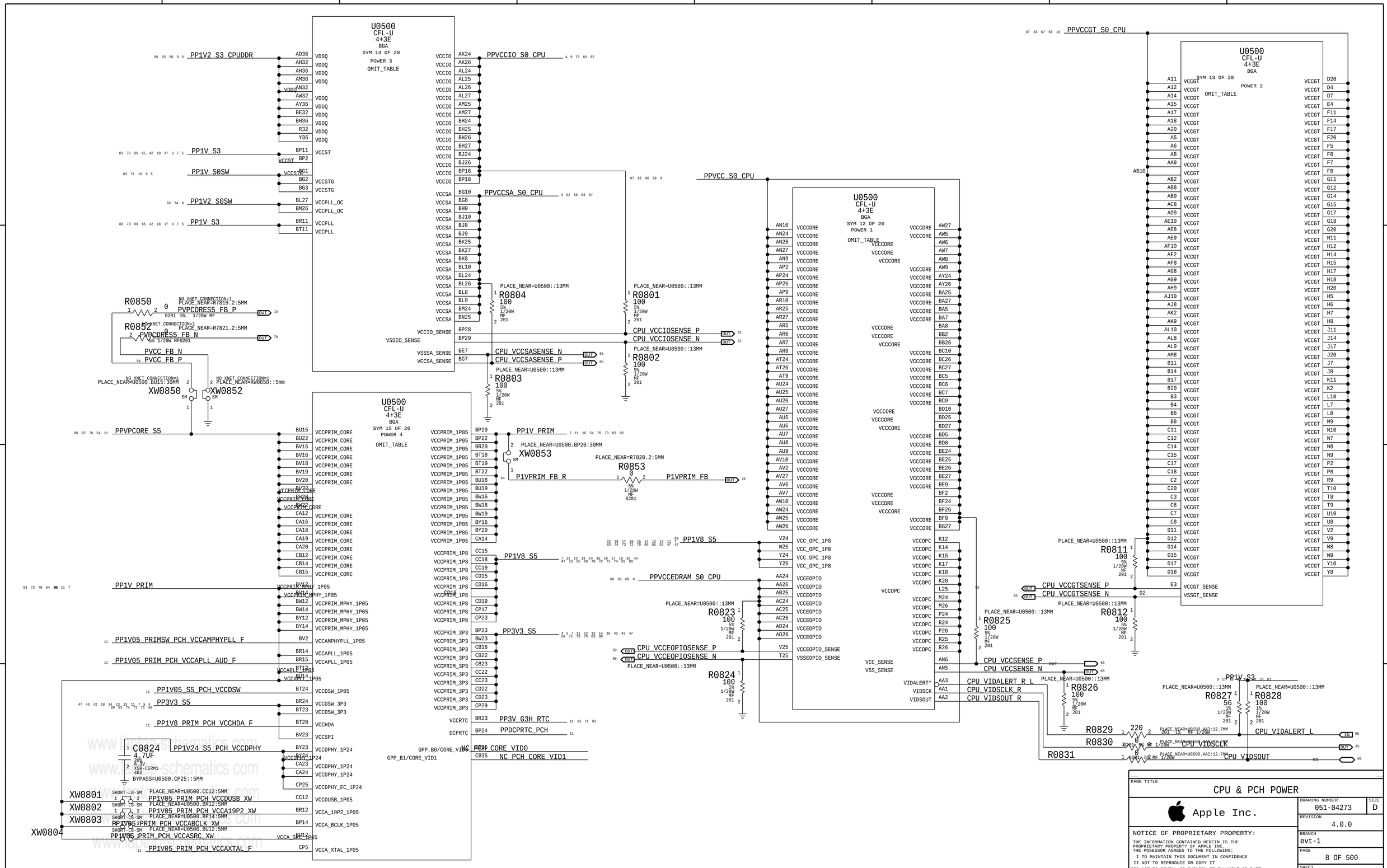

PAGE TITLE

CPU & PCH POWER

Apple Inc.

DRAWING NUMBER 051-04273

SIZE D

REVISION 4.0.0

BRANCH evt-1

PAGE 8 OF 500

SHEET 7 OF 98

NOTICE OF PROPRIETARY PROPERTY:

THE INFORMATION CONTAINED HEREIN IS THE PROPRIETARY PROPERTY OF APPLE INC.
THE POSESSOR AGREES TO THE FOLLOWING:
I TO MAINTAIN THIS DOCUMENT IN CONFIDENCE
II NOT TO REPRODUCE OR COPY IT
III NOT TO REVEAL OR PUBLISH IT IN WHOLE OR PART
IV ALL RIGHTS RESERVED

BOM_COST_GROUP=CPU & CHIPSET

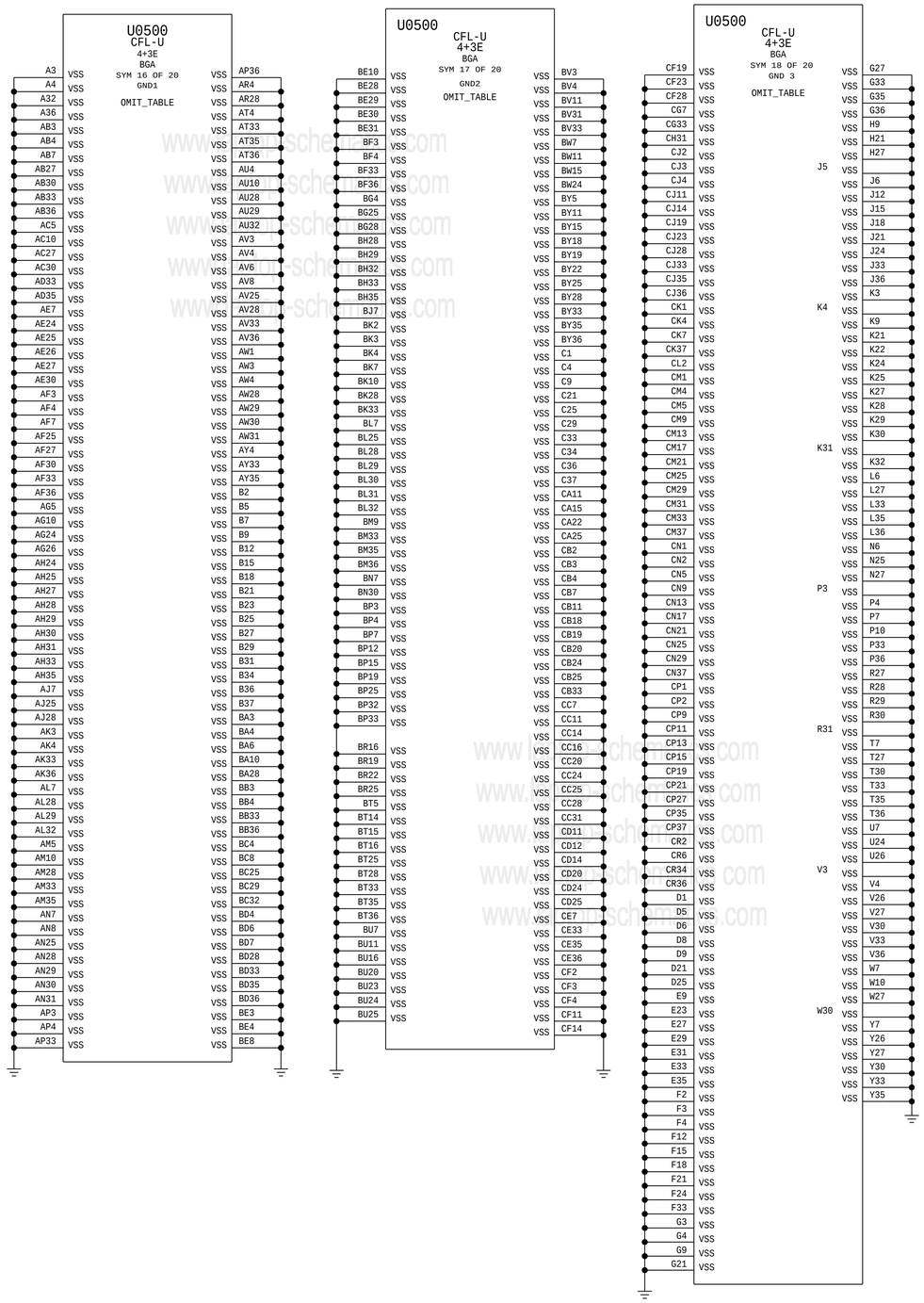

BOM_COST_GROUP=CPU & CHIPSET

PAGE TITLE

CPU & PCH Grounds

Apple Inc.

DRAWING NUMBER 051-04273

SIZE D

REVISION 4.0.0

BRANCH evt-1

PAGE 9 OF 500

SHEET 8 OF 98

NOTICE OF PROPRIETARY PROPERTY:
THE INFORMATION CONTAINED HEREIN IS THE PROPRIETARY PROPERTY OF APPLE INC.
THE POSESSOR AGREES TO THE FOLLOWING:
I TO MAINTAIN THIS DOCUMENT IN CONFIDENCE
II NOT TO REPRODUCE OR COPY IT
III NOT TO REVEAL OR PUBLISH IT IN WHOLE OR PART
IV ALL RIGHTS RESERVED

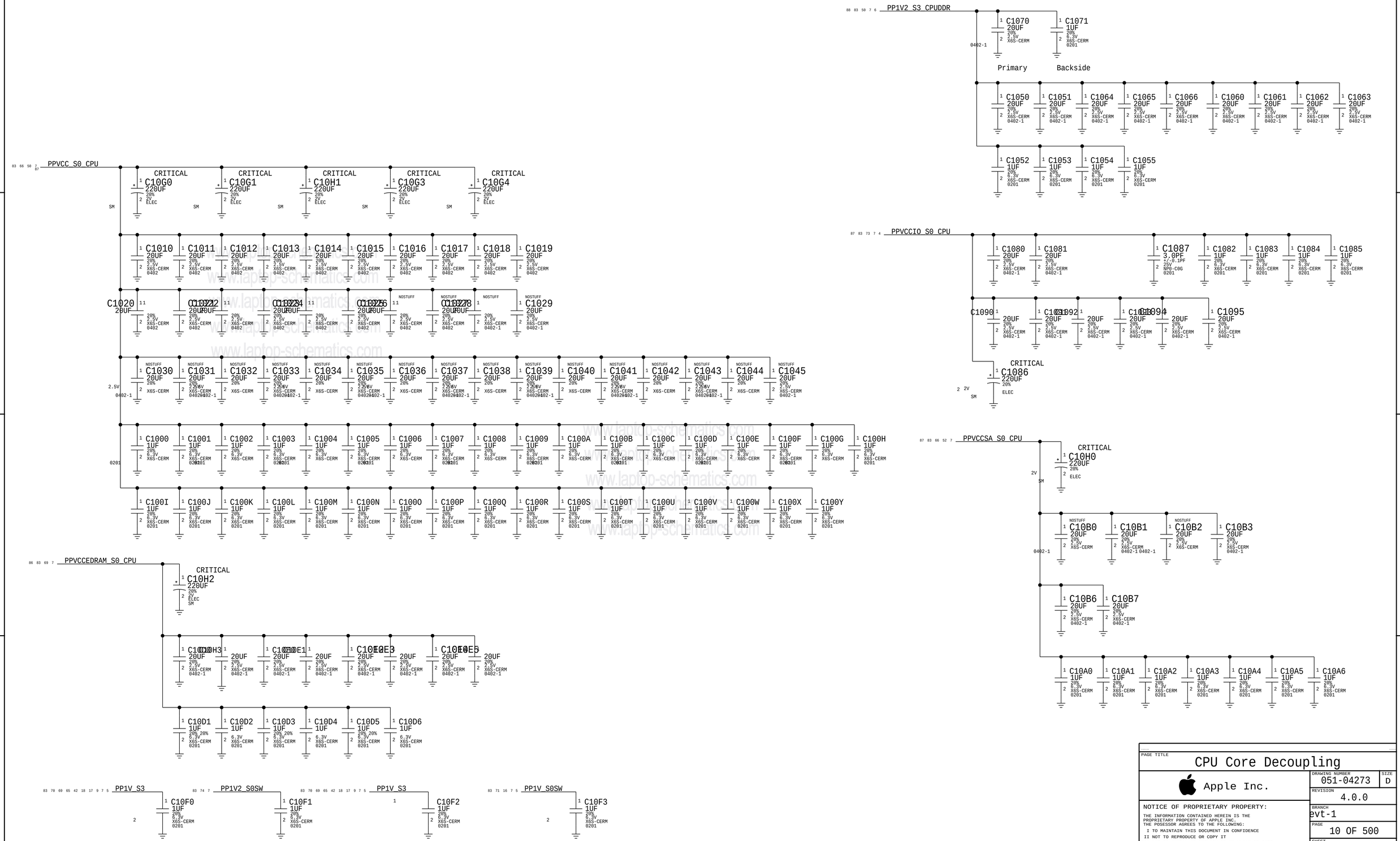

www.laptop-schematics.com

BOM_COST_GROUP=CPU & CHIPSET

PAGE TITLE
CPU Core Decoupling

Apple Inc.

DRAWING NUMBER 051-04273 SIZE D
REVISION 4.0.0
BRANCH evt-1
PAGE 10 OF 500
SHEET 9 OF 98

NOTICE OF PROPRIETARY PROPERTY:
THE INFORMATION CONTAINED HEREIN IS THE PROPRIETARY PROPERTY OF APPLE INC.
THE POSESSOR AGREES TO THE FOLLOWING:
I TO MAINTAIN THIS DOCUMENT IN CONFIDENCE
II NOT TO REPRODUCE OR COPY IT
III NOT TO REVEAL OR PUBLISH IT IN WHOLE OR PART
IV ALL RIGHTS RESERVED

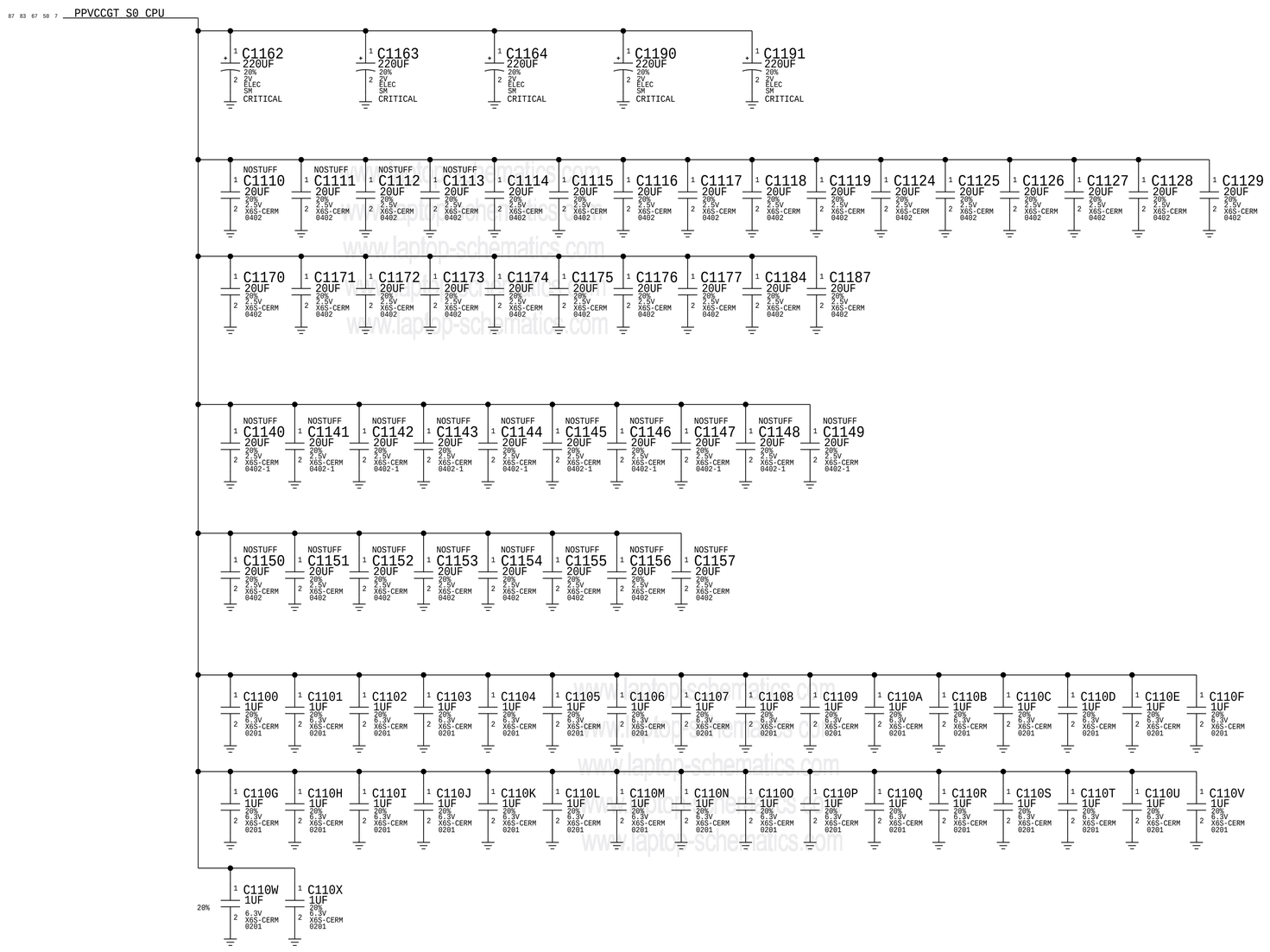

www.laptop-schematics.com

BOM_COST_GROUP=CPU & CHIPSET

PAGE TITLE
CPU GT Decoupling

Apple Inc.

DRAWING NUMBER 051-04273 SIZE D

REVISION 4.0.0

BRANCH evt-1

PAGE 11 OF 500

SHEET 10 OF 98

NOTICE OF PROPRIETARY PROPERTY:
THE INFORMATION CONTAINED HEREIN IS THE PROPRIETARY PROPERTY OF APPLE INC.
THE POSESSOR AGREES TO THE FOLLOWING:
I TO MAINTAIN THIS DOCUMENT IN CONFIDENCE
II NOT TO REPRODUCE OR COPY IT
III NOT TO REVEAL OR PUBLISH IT IN WHOLE OR PART
IV ALL RIGHTS RESERVED

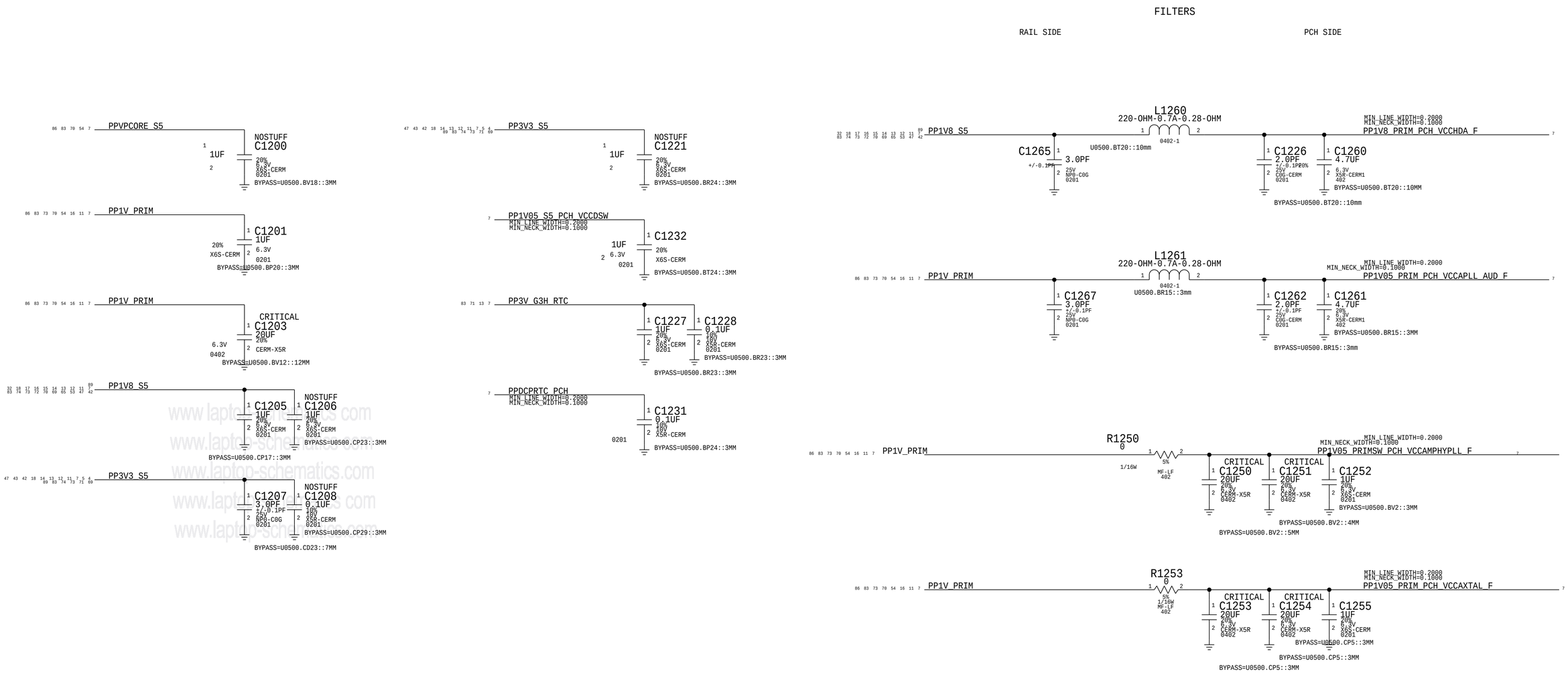

BOM_COST_GROUP=CPU & CHIPSET

PAGE TITLE	PCH Decoupling
	Apple Inc.
DRAWING NUMBER	051-04273
SIZE	D
REVISION	4.0.0
BRANCH	evt-1
PAGE	12 OF 500
SHEET	11 OF 98

NOTICE OF PROPRIETARY PROPERTY:
THE INFORMATION CONTAINED HEREIN IS THE PROPRIETARY PROPERTY OF APPLE INC.
THE POSESSOR AGREES TO THE FOLLOWING:
I TO MAINTAIN THIS DOCUMENT IN CONFIDENCE
II NOT TO REPRODUCE OR COPY IT
III NOT TO REVEAL OR PUBLISH IT IN WHOLE OR PART
IV ALL RIGHTS RESERVED

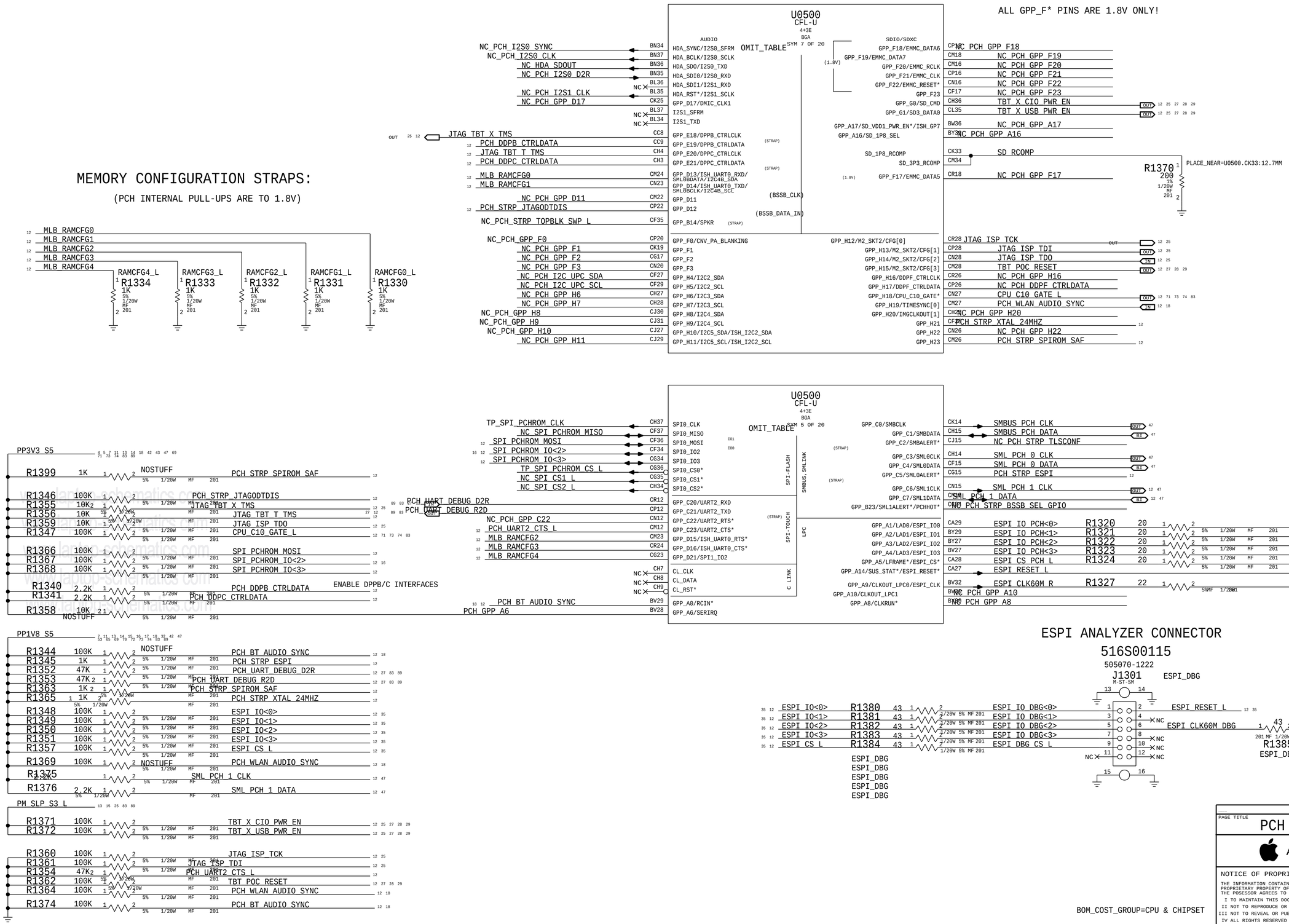
U0500
CFL-U
4+3E
BGA
SYM 7 OF 20
OMIT_TABLE
ALL GPP_F* PINS ARE 1.8V ONLY!
MEMORY CONFIGURATION STRAPS:
(PCH INTERNAL PULL-UPS ARE TO 1.8V)
MLB_RAMCFG0
MLB_RAMCFG1
MLB_RAMCFG2
MLB_RAMCFG3
MLB_RAMCFG4
R1334 1K
R1333 1K
R1332 1K
R1331 1K
R1330 1K
R1370 200
PLACE_NEAR=U0500.CK33:12.7MM
U0500
CFL-U
4+3E
BGA
SYM 5 OF 20
OMIT_TABLE
PP3V3_S5
R1399 1K NOSTUFF
R1346 100K
R1355 10K
R1356 10K
R1359 10K
R1347 100K
R1366 100K
R1367 100K
R1368 100K
R1340 2.2K
R1341 2.2K
R1358 10K NOSTUFF
ENABLE DPPB/C INTERFACES
PP1V8_S5
R1344 100K NOSTUFF
R1345 1K
R1352 47K
R1353 47K
R1363 1K
R1365 1K
R1348 100K
R1349 100K
R1350 100K
R1351 100K
R1357 100K
R1369 100K NOSTUFF
R1375 2.2K
R1376 2.2K
PM_SLP_S3_L
R1371 100K
R1372 100K
R1360 100K
R1361 100K
R1354 47K
R1362 100K
R1364 100K
R1374 100K
ESPI ANALYZER CONNECTOR
516S00115
505070-1222
J1301
M-ST-SM
ESPI_DBG
R1380 43
R1381 43
R1382 43
R1383 43
R1384 43
R1385 43
BOM_COST_GROUP=CPU & CHIPSET
PAGE TITLE
PCH AUDIO/LPC/SPI/SMBUS
Apple Inc.
DRAWING NUMBER
051-04273
SIZE
D
REVISION
4.0.0
BRANCH
evt-1
PAGE
13 OF 500
SHEET
12 OF 98
NOTICE OF PROPRIETARY PROPERTY:
THE INFORMATION CONTAINED HEREIN IS THE PROPRIETARY PROPERTY OF APPLE INC.
THE POSESSOR AGREES TO THE FOLLOWING:
I TO MAINTAIN THIS DOCUMENT IN CONFIDENCE
II NOT TO REPRODUCE OR COPY IT
III NOT TO REVEAL OR PUBLISH IT IN WHOLE OR PART
IV ALL RIGHTS RESERVED

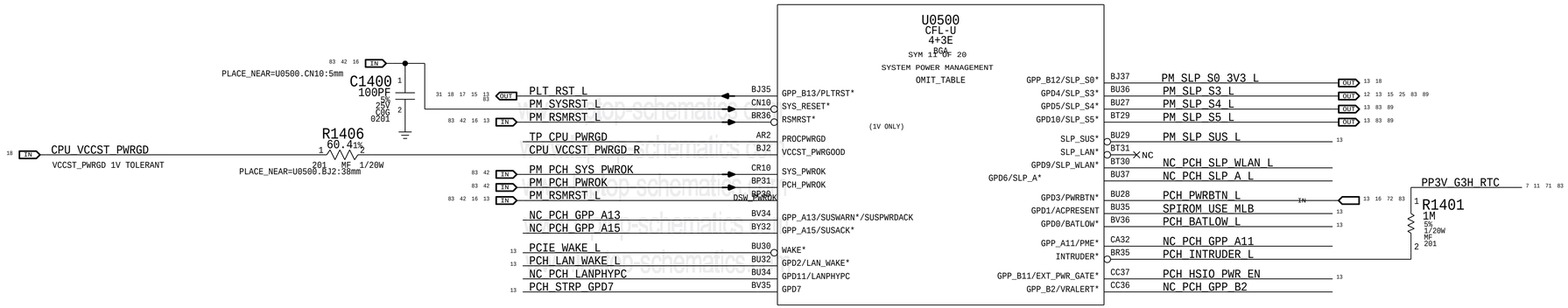

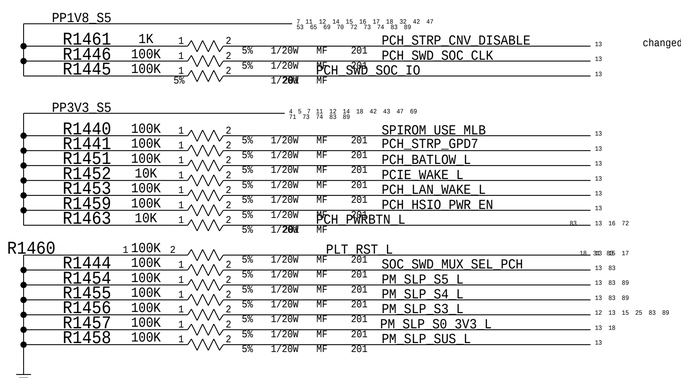

NOTE: =PM_SLP_S0_L HAS INTERNAL PULL-UP BEFORE RSMRST_L IS RELEASED.
THIS CAUSES A VOLTAGE DIVIDER WITH THE PULL-DOWN HERE.
THE SIGNAL IS DRIVEN HI AFTER RSMRST_L IS RELEASED.

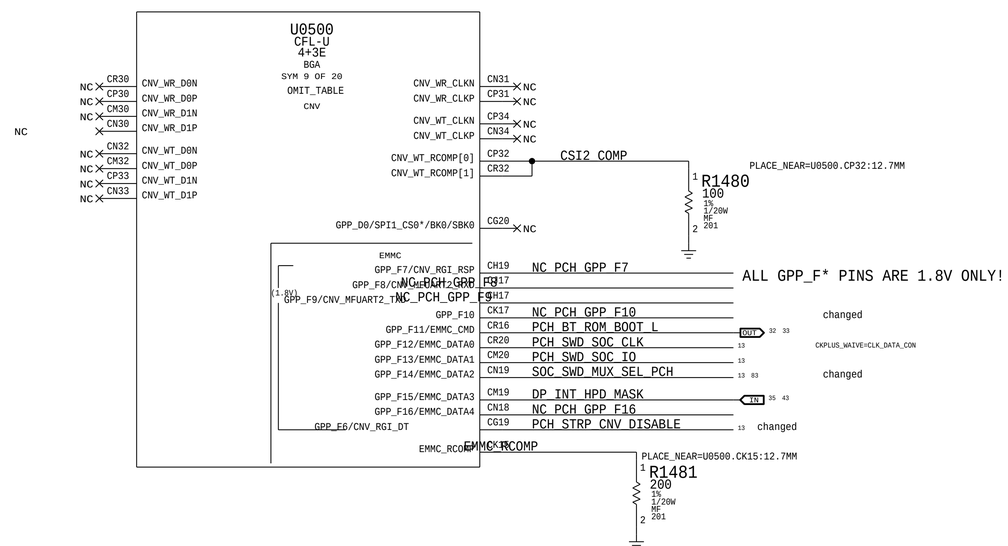

BOM_COST_GROUP=CPU & CHIPSET

PAGE TITLE	PCH POWER MANAGEMENT
Apple Inc.	DRAWING NUMBER 051-04273 SIZE D
	REVISION 4.0.0
NOTICE OF PROPRIETARY PROPERTY: THE INFORMATION CONTAINED HEREIN IS THE PROPRIETARY PROPERTY OF APPLE INC. THE POSESSOR AGREES TO THE FOLLOWING: I TO MAINTAIN THIS DOCUMENT IN CONFIDENCE II NOT TO REPRODUCE OR COPY IT III NOT TO REVEAL OR PUBLISH IT IN WHOLE OR PART IV ALL RIGHTS RESERVED	BRANCH evt-1
	PAGE 14 OF 500
	SHEET 13 OF 98

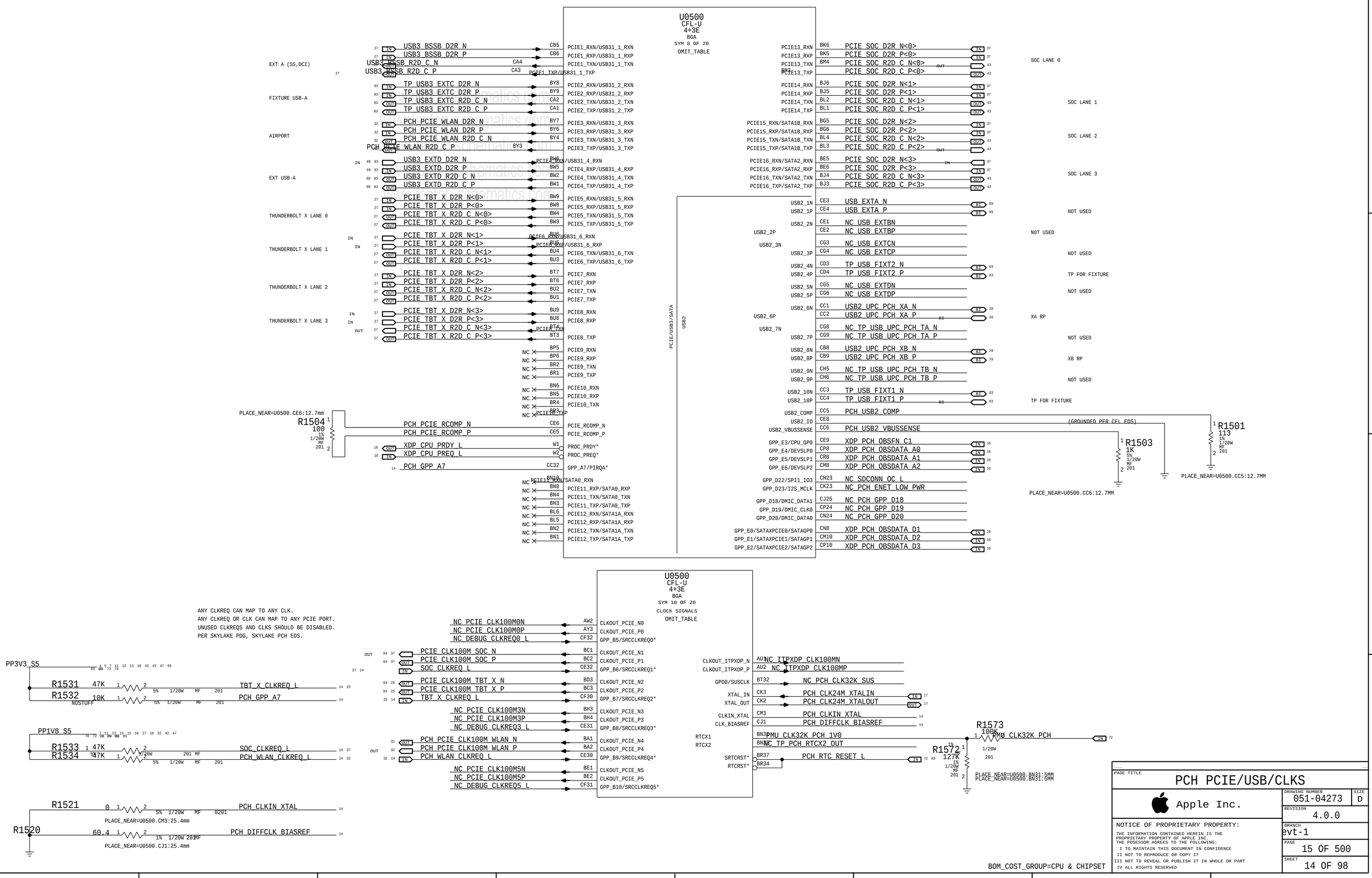
U0500
CFL-U
4+3E
BGA
SYM 8 OF 20
OMIT_TABLE
EXT A (SS,DCI)
USB3_BSSB_D2R_N
USB3_BSSB_D2R_P
USB3_BSSB_R2D_C_N
USB3_BSSB_R2D_C_P
FIXTURE USB-A
TP_USB3_EXTC_D2R_N
TP_USB3_EXTC_D2R_P
TP_USB3_EXTC_R2D_C_N
TP_USB3_EXTC_R2D_C_P
AIRPORT
PCH_PCIE_WLAN_D2R_N
PCH_PCIE_WLAN_D2R_P
PCH_PCIE_WLAN_R2D_C_N
PCH_PCIE_WLAN_R2D_C_P
EXT USB-A
USB3_EXTD_D2R_N
USB3_EXTD_D2R_P
USB3_EXTD_R2D_C_N
USB3_EXTD_R2D_C_P
THUNDERBOLT X LANE 0
PCIE_TBT_X_D2R_N<0>
PCIE_TBT_X_D2R_P<0>
PCIE_TBT_X_R2D_C_N<0>
PCIE_TBT_X_R2D_C_P<0>
THUNDERBOLT X LANE 1
PCIE_TBT_X_D2R_N<1>
PCIE_TBT_X_D2R_P<1>
PCIE_TBT_X_R2D_C_N<1>
PCIE_TBT_X_R2D_C_P<1>
THUNDERBOLT X LANE 2
PCIE_TBT_X_D2R_N<2>
PCIE_TBT_X_D2R_P<2>
PCIE_TBT_X_R2D_C_N<2>
PCIE_TBT_X_R2D_C_P<2>
THUNDERBOLT X LANE 3
PCIE_TBT_X_D2R_N<3>
PCIE_TBT_X_D2R_P<3>
PCIE_TBT_X_R2D_C_N<3>
PCIE_TBT_X_R2D_C_P<3>
PCIE13_RXN
PCIE13_RXP
PCIE13_TXN
PCIE13_TXP
PCIE_SOC_D2R_N<0>
PCIE_SOC_D2R_P<0>
PCIE_SOC_R2D_C_N<0>
PCIE_SOC_R2D_C_P<0>
SOC LANE 0
PCIE14_RXN
PCIE14_RXP
PCIE14_TXN
PCIE14_TXP
PCIE_SOC_D2R_N<1>
PCIE_SOC_D2R_P<1>
PCIE_SOC_R2D_C_N<1>
PCIE_SOC_R2D_C_P<1>
SOC LANE 1
PCIE15_RXN/SATA1B_RXN
PCIE15_RXP/SATA1B_RXP
PCIE15_TXN/SATA1B_TXN
PCIE15_TXP/SATA1B_TXP
PCIE_SOC_D2R_N<2>
PCIE_SOC_D2R_P<2>
PCIE_SOC_R2D_C_N<2>
PCIE_SOC_R2D_C_P<2>
SOC LANE 2
PCIE16_RXN/SATA2_RXN
PCIE16_RXP/SATA2_RXP
PCIE16_TXN/SATA2_TXN
PCIE16_TXP/SATA2_TXP
PCIE_SOC_D2R_N<3>
PCIE_SOC_D2R_P<3>
PCIE_SOC_R2D_C_N<3>
PCIE_SOC_R2D_C_P<3>
SOC LANE 3
USB_EXTA_N
USB_EXTA_P
NOT USED
NC_USB_EXTBN
NC_USB_EXTBP
NOT USED
NC_USB_EXTCN
NC_USB_EXTCP
NOT USED
TP_USB_FIXT2_N
TP_USB_FIXT2_P
TP FOR FIXTURE
NC_USB_EXTDN
NC_USB_EXTDP
NOT USED
USB2_UPC_PCH_XA_N
USB2_UPC_PCH_XA_P
XA RP
NC_TP_USB_UPC_PCH_TA_N
NC_TP_USB_UPC_PCH_TA_P
NOT USED
USB2_UPC_PCH_XB_N
USB2_UPC_PCH_XB_P
XB RP
NC_TP_USB_UPC_PCH_TB_N
NC_TP_USB_UPC_PCH_TB_P
NOT USED
TP_USB_FIXT1_N
TP_USB_FIXT1_P
TP FOR FIXTURE
PCH_USB2_COMP
(GROUNDED PER CFL EDS)
PCH_USB2_VBUSSENSE
R1501
113
1%
1/20W
MF
201
PLACE_NEAR=U0500.CC5:12.7MM
R1503
1K
5%
1/20W
MF
201
PLACE_NEAR=U0500.CC6:12.7MM
XDP_PCH_OBSFN_C1
XDP_PCH_OBSDATA_A0
XDP_PCH_OBSDATA_A1
XDP_PCH_OBSDATA_A2
NC_SDCONN_OC_L
NC_PCH_ENET_LOW_PWR
NC_PCH_GPP_D18
NC_PCH_GPP_D19
NC_PCH_GPP_D20
XDP_PCH_OBSDATA_D1
XDP_PCH_OBSDATA_D2
XDP_PCH_OBSDATA_D3
PLACE_NEAR=U0500.CE6:12.7mm
R1504
100
1%
1/20W
MF
201
PCH_PCIE_RCOMP_N
PCH_PCIE_RCOMP_P
XDP_CPU_PRDY_L
XDP_CPU_PREQ_L
PCH_GPP_A7
PCIE/USB3/SATA
USB2
U0500
CFL-U
4+3E
BGA
SYM 10 OF 20
CLOCK SIGNALS
OMIT_TABLE
ANY CLKREQ CAN MAP TO ANY CLK.
ANY CLKREQ OR CLK CAN MAP TO ANY PCIE PORT.
UNUSED CLKREQS AND CLKS SHOULD BE DISABLED.
PER SKYLAKE PDG, SKYLAKE PCH EDS.
NC_PCIE_CLK100M0N
NC_PCIE_CLK100M0P
NC_DEBUG_CLKREQ0_L
PCIE_CLK100M_SOC_N
PCIE_CLK100M_SOC_P
SOC_CLKREQ_L
PCIE_CLK100M_TBT_X_N
PCIE_CLK100M_TBT_X_P
TBT_X_CLKREQ_L
NC_PCIE_CLK100M3N
NC_PCIE_CLK100M3P
NC_DEBUG_CLKREQ3_L
PCH_PCIE_CLK100M_WLAN_N
PCH_PCIE_CLK100M_WLAN_P
PCH_WLAN_CLKREQ_L
NC_PCIE_CLK100M5N
NC_PCIE_CLK100M5P
NC_DEBUG_CLKREQ5_L
NC_ITPXDP_CLK100MN
NC_ITPXDP_CLK100MP
NC_PCH_CLK32K_SUS
PCH_CLK24M_XTALIN
PCH_CLK24M_XTALOUT
PCH_CLKIN_XTAL
PCH_DIFFCLK_BIASREF
PMU_CLK32K_PCH_1V0
NC_TP_PCH_RTCX2_OUT
PCH_RTC_RESET_L
PMU_CLK32K_PCH
R1573
100K
1%
1/20W
201
R1572
127K
1%
1/20W
MF
201
PLACE_NEAR=U0500.BN31:5MM
PLACE_NEAR=U0500.BN31:5MM
PP3V3_S5
R1531
47K
5%
1/20W
MF
201
TBT_X_CLKREQ_L
R1532
10K
NOSTUFF
PCH_GPP_A7
PP1V8_S5
R1533
47K
SOC_CLKREQ_L
R1534
47K
PCH_WLAN_CLKREQ_L
R1521
0
0201
PCH_CLKIN_XTAL
PLACE_NEAR=U0500.CM3:25.4mm
R1520
60.4
1%
1/20W
PCH_DIFFCLK_BIASREF
PLACE_NEAR=U0500.CJ1:25.4mm
BOM_COST_GROUP=CPU & CHIPSET
PAGE TITLE
PCH PCIE/USB/CLKS
Apple Inc.
DRAWING NUMBER
051-04273
SIZE
D
REVISION
4.0.0
BRANCH
evt-1
PAGE
15 OF 500
SHEET
14 OF 98
NOTICE OF PROPRIETARY PROPERTY:
THE INFORMATION CONTAINED HEREIN IS THE PROPRIETARY PROPERTY OF APPLE INC.
THE POSESSOR AGREES TO THE FOLLOWING:
I TO MAINTAIN THIS DOCUMENT IN CONFIDENCE
II NOT TO REPRODUCE OR COPY IT
III NOT TO REVEAL OR PUBLISH IT IN WHOLE OR PART
IV ALL RIGHTS RESERVED

ALL GPP_F* PINS ARE 1.8V ONLY!

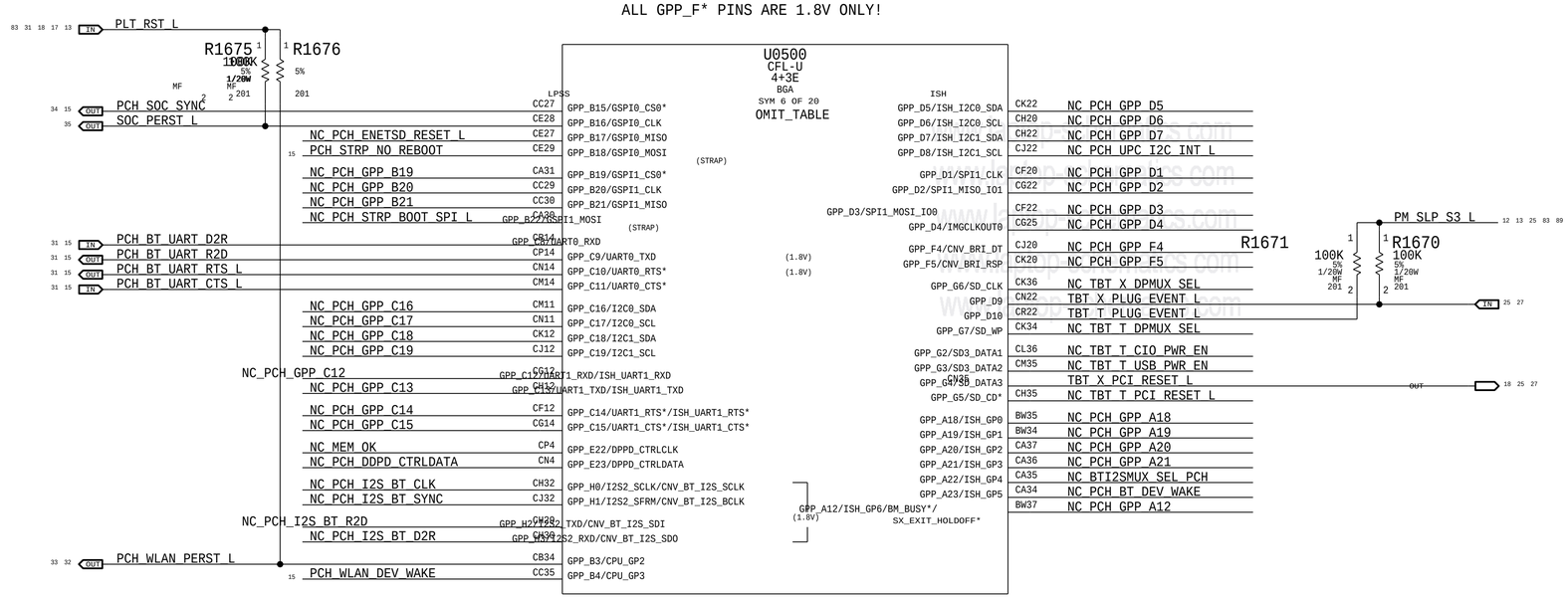

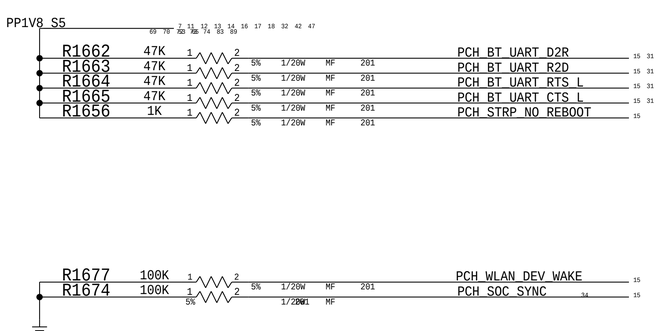

BOM_COST_GROUP=CPU & CHIPSET

PAGE TITLE
PCH SPI/UART/GPIO

Apple Inc.

DRAWING NUMBER 051-04273 SIZE D
REVISION 4.0.0
BRANCH evt-1
PAGE 16 OF 500
SHEET 15 OF 98

NOTICE OF PROPRIETARY PROPERTY:
THE INFORMATION CONTAINED HEREIN IS THE PROPRIETARY PROPERTY OF APPLE INC.
THE POSESSOR AGREES TO THE FOLLOWING:
I TO MAINTAIN THIS DOCUMENT IN CONFIDENCE
II NOT TO REPRODUCE OR COPY IT
III NOT TO REVEAL OR PUBLISH IT IN WHOLE OR PART
IV ALL RIGHTS RESERVED

Primary / Merged (CPU/PCH) Micro2-XDP

NOTE: This is not the standard XDP pinout.
Use with 921-0133 Adapter Flex to
support chipset debug.

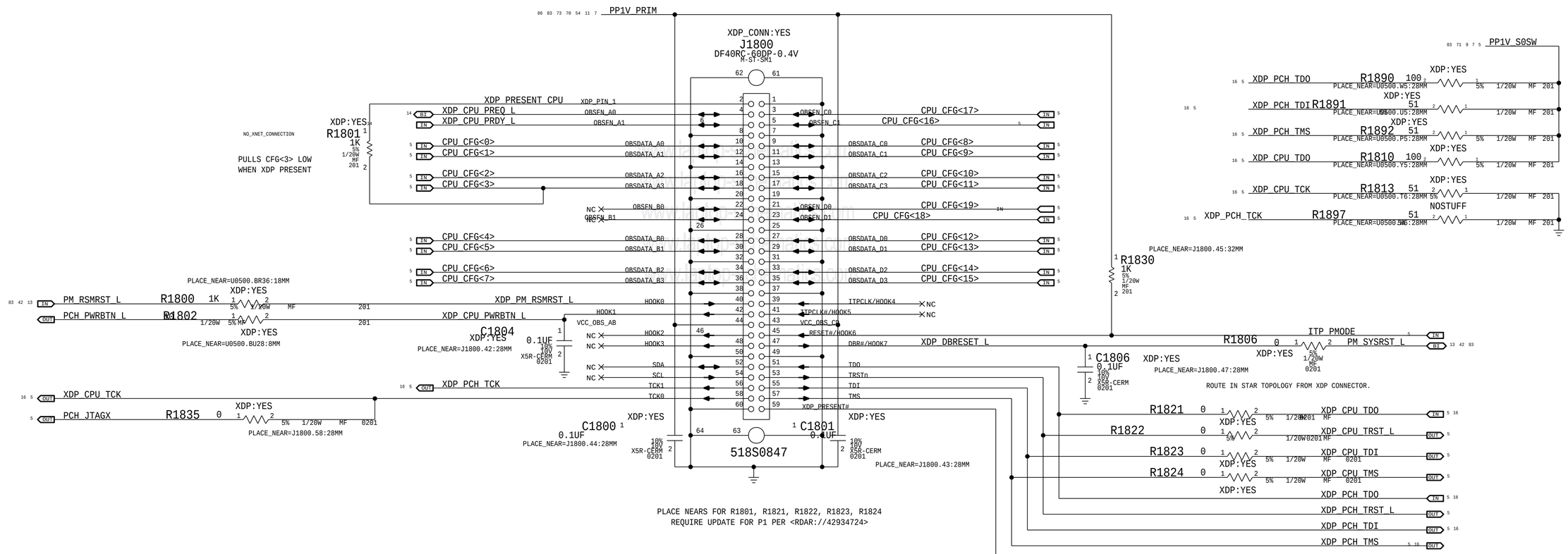

PCH XDP Signals

These signals do not connect to the Primary (Merged) XDP connector in this architecture.
The PDG puts them on a secondary XDP connector that is only needed in some PCH debugging situation.
They are listed here to show their secondary XDP functions and to provide test points for signals that are not used elsewhere.

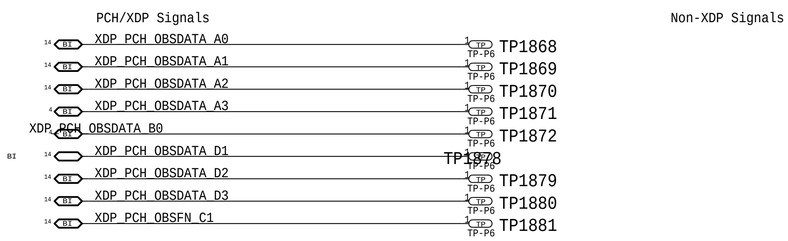

Unused GPIOs have TPs.

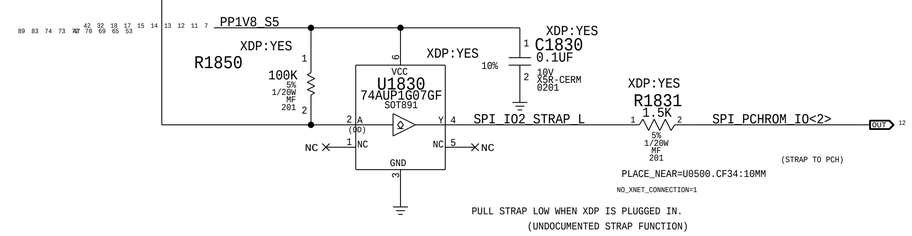

NEED TO CONNECT TO VCCST, *STG POWER LOGIC

BOM_COST_GROUP=DEBUG

PAGE TITLE	CPU/PCH Merged XDP
Apple Inc.	DRAWING NUMBER 051-04273 SIZE D
	REVISION 4.0.0
NOTICE OF PROPRIETARY PROPERTY: THE INFORMATION CONTAINED HEREIN IS THE PROPRIETARY PROPERTY OF APPLE INC. THE POSESSOR AGREES TO THE FOLLOWING: I TO MAINTAIN THIS DOCUMENT IN CONFIDENCE II NOT TO REPRODUCE OR COPY IT III NOT TO REVEAL OR PUBLISH IT IN WHOLE OR PART IV ALL RIGHTS RESERVED	BRANCH evt-1
	PAGE 18 OF 500
	SHEET 16 OF 98

24MHz CLOCK

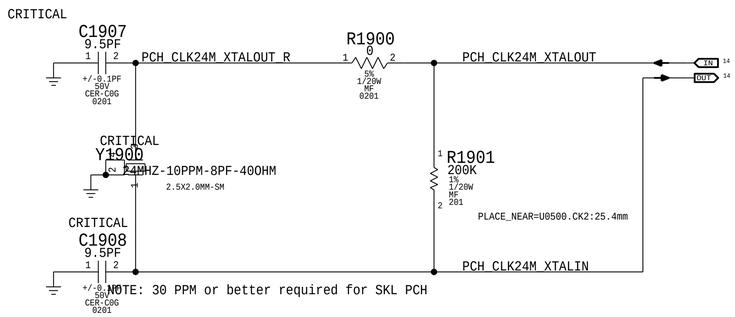

THRMTRIP# ISOLATION & LEVEL-SHIFT TO 1V8

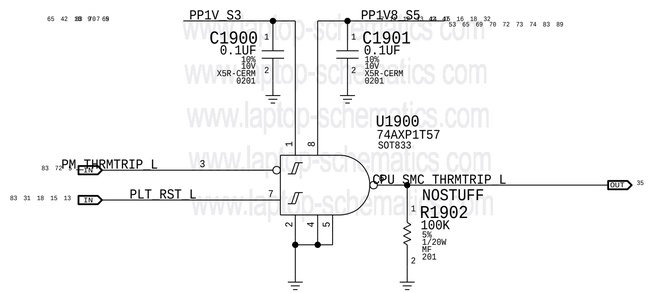

www.laptop-schematics.com

BOM_COST_GROUP=CPU & CHIPSET

PAGE TITLE

Chipset Support 1

Apple Inc.

DRAWING NUMBER 051-04273

SIZE D

REVISION 4.0.0

BRANCH evt-1

PAGE 19 OF 500

SHEET 17 OF 98

NOTICE OF PROPRIETARY PROPERTY:
THE INFORMATION CONTAINED HEREIN IS THE PROPRIETARY PROPERTY OF APPLE INC.
THE POSESSOR AGREES TO THE FOLLOWING:
I TO MAINTAIN THIS DOCUMENT IN CONFIDENCE
II NOT TO REPRODUCE OR COPY IT
III NOT TO REVEAL OR PUBLISH IT IN WHOLE OR PART
IV ALL RIGHTS RESERVED

PLATFORM RESET LEVEL-SHIFTER TO 3V3

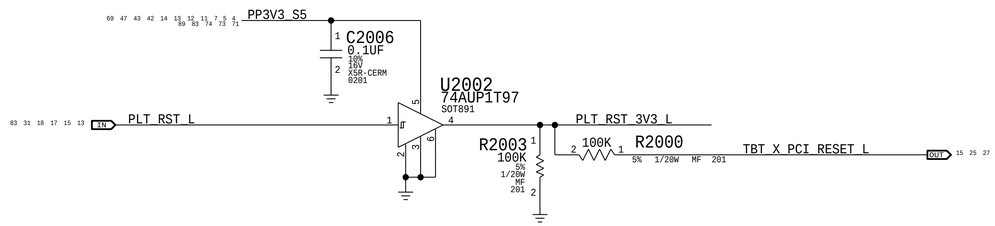

SLP_S0# LEVEL SHIFTER TO 1V8

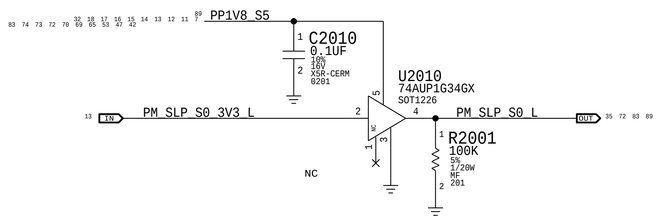

ALL_SYS_PWRGD QUALIFIER & VCCST_PWRGD LEVEL SHIFTER TO 1V

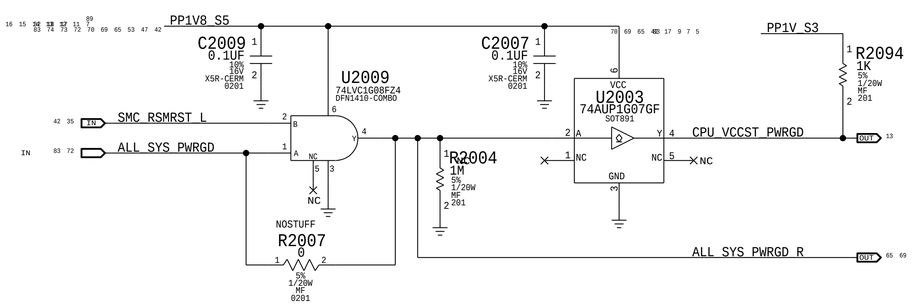

TPs for Chipset Debug Pins

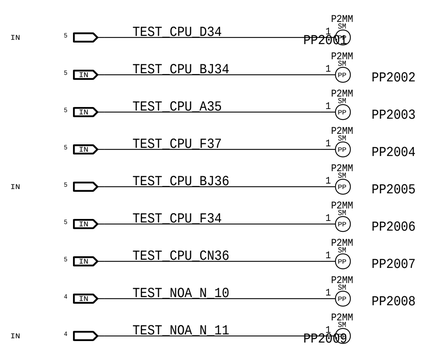

BT AUDIO SYNC BUFFER

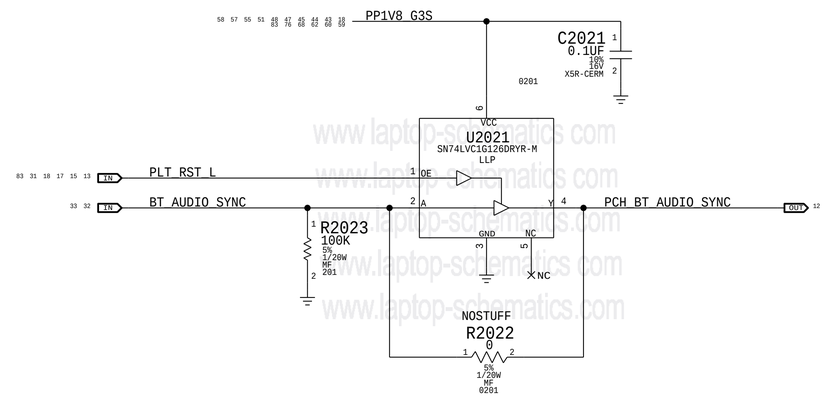

WLAN AUDIO SYNC BUFFER

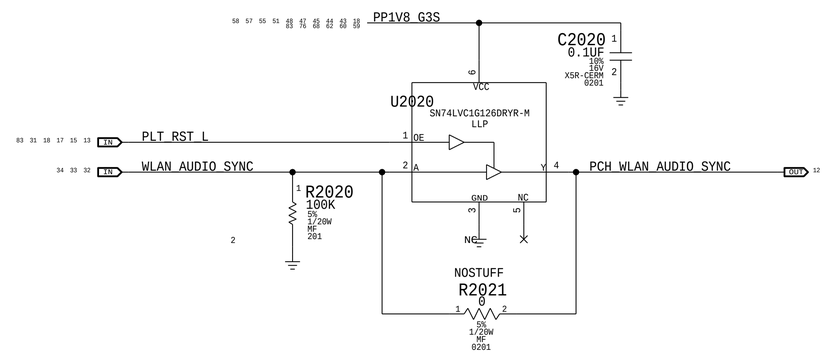

BOM_COST_GROUP=CPU & CHIPSET

PAGE TITLE	CHIPSET SUPPORT 2
	Apple Inc.
DRAWING NUMBER	051-04273
SIZE	D
REVISION	4.0.0
BRANCH	evt-1
PAGE	20 OF 500
SHEET	18 OF 98

NOTICE OF PROPRIETARY PROPERTY:
THE INFORMATION CONTAINED HEREIN IS THE PROPRIETARY PROPERTY OF APPLE INC.
THE POSESSOR AGREES TO THE FOLLOWING:
I TO MAINTAIN THIS DOCUMENT IN CONFIDENCE
II NOT TO REPRODUCE OR COPY IT
III NOT TO REVEAL OR PUBLISH IT IN WHOLE OR PART
IV ALL RIGHTS RESERVED

CPU-Based Margining

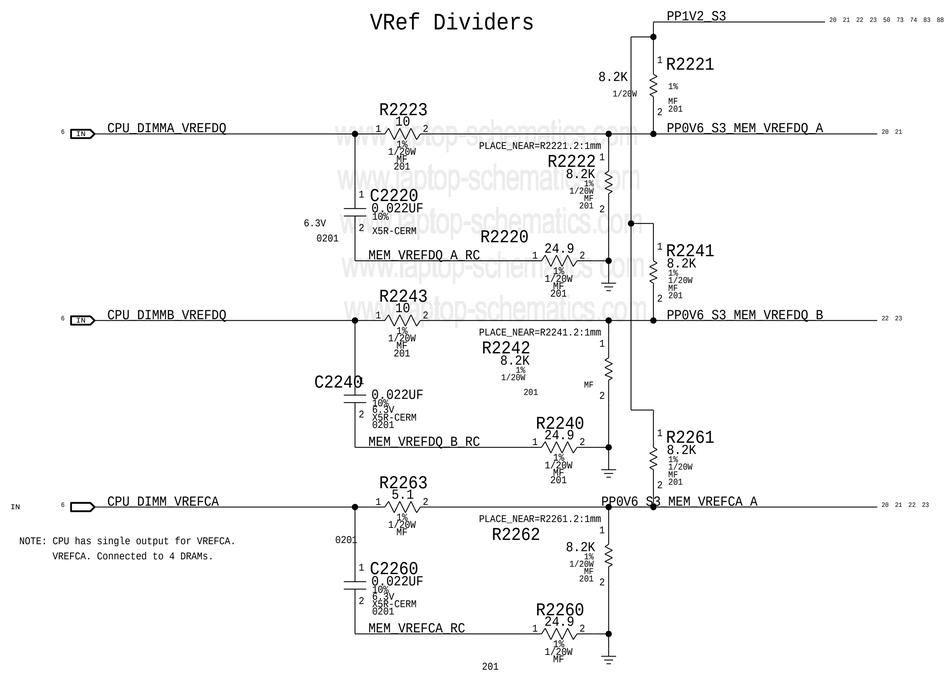

BOM_COST_GROUP=CPU & CHIPSET

PAGE TITLE	LPDDR3 VREF MARGINING
Apple Inc.	DRAWING NUMBER 051-04273 SIZE D
	REVISION 4.0.0
NOTICE OF PROPRIETARY PROPERTY: THE INFORMATION CONTAINED HEREIN IS THE PROPRIETARY PROPERTY OF APPLE INC. THE POSESSOR AGREES TO THE FOLLOWING: I TO MAINTAIN THIS DOCUMENT IN CONFIDENCE II NOT TO REPRODUCE OR COPY IT III NOT TO REVEAL OR PUBLISH IT IN WHOLE OR PART IV ALL RIGHTS RESERVED	BRANCH evt-1
	PAGE 22 OF 500
	SHEET 19 OF 98

www.laptop-schematics.com

LPDDR3 CHANNEL A (0-31)

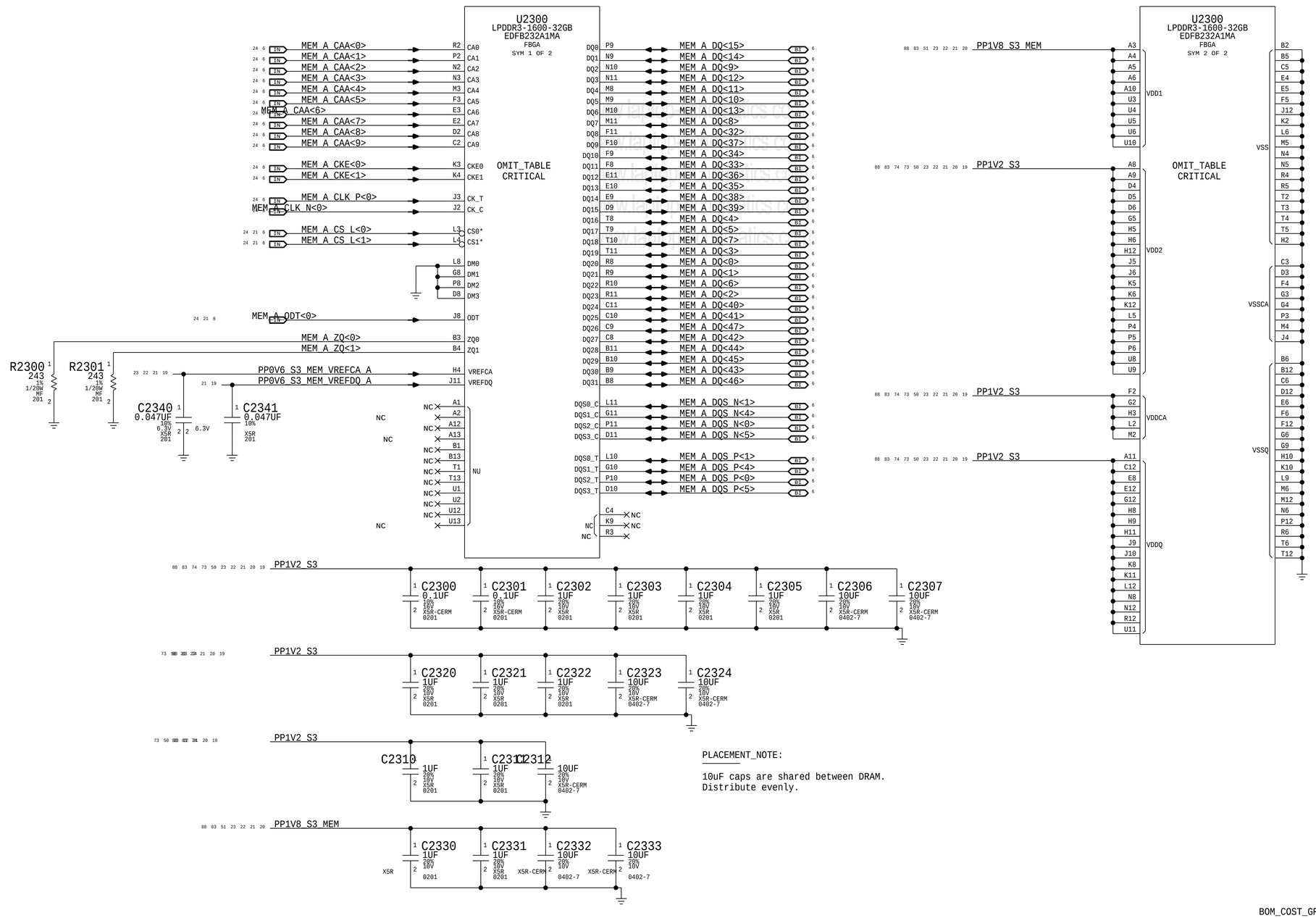

PLACEMENT_NOTE:

10uF caps are shared between DRAM.
Distribute evenly.

BOM_COST_GROUP=DRAM

SYNC_MASTER=J213_KEI	SYNC_DATE=09/10/2018
PAGE TITLE	LPDDR3 DRAM Channel A (00-31)
Apple Inc.	DRAWING NUMBER 051-04273 / SIZE D
	REVISION 4.0.0
NOTICE OF PROPRIETARY PROPERTY: THE INFORMATION CONTAINED HEREIN IS THE PROPRIETARY PROPERTY OF APPLE INC. THE POSESSOR AGREES TO THE FOLLOWING: I TO MAINTAIN THIS DOCUMENT IN CONFIDENCE II NOT TO REPRODUCE OR COPY IT III NOT TO REVEAL OR PUBLISH IT IN WHOLE OR PART IV ALL RIGHTS RESERVED	BRANCH evt-1
	PAGE 23 OF 500
	SHEET 20 OF 98

LPDDR3 CHANNEL A (32-63)

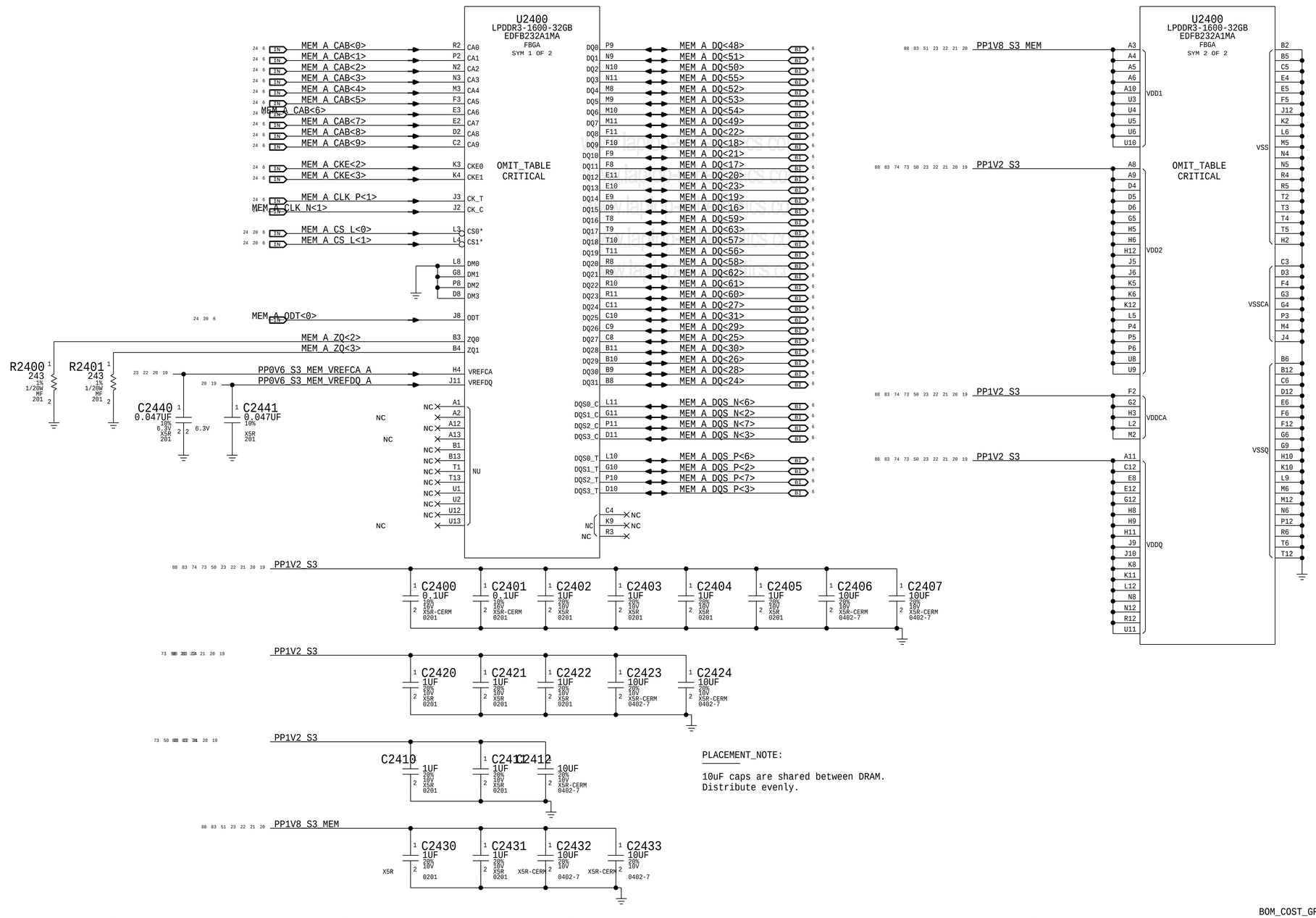

PLACEMENT_NOTE:

10uF caps are shared between DRAM.
Distribute evenly.

BOM_COST_GROUP=DRAM

SYNC_MASTER=J213_KEI SYNC_DATE=09/10/2018

PAGE TITLE
LPDDR3 DRAM Channel A (32-63)

Apple Inc.

DRAWING NUMBER	051-04273
SIZE	D
REVISION	4.0.0
BRANCH	evt-1
PAGE	24 OF 500
SHEET	21 OF 98

NOTICE OF PROPRIETARY PROPERTY:
THE INFORMATION CONTAINED HEREIN IS THE PROPRIETARY PROPERTY OF APPLE INC.
THE POSESSOR AGREES TO THE FOLLOWING:
I TO MAINTAIN THIS DOCUMENT IN CONFIDENCE
II NOT TO REPRODUCE OR COPY IT
III NOT TO REVEAL OR PUBLISH IT IN WHOLE OR PART
IV ALL RIGHTS RESERVED

LPDDR3 CHANNEL B (0-31)

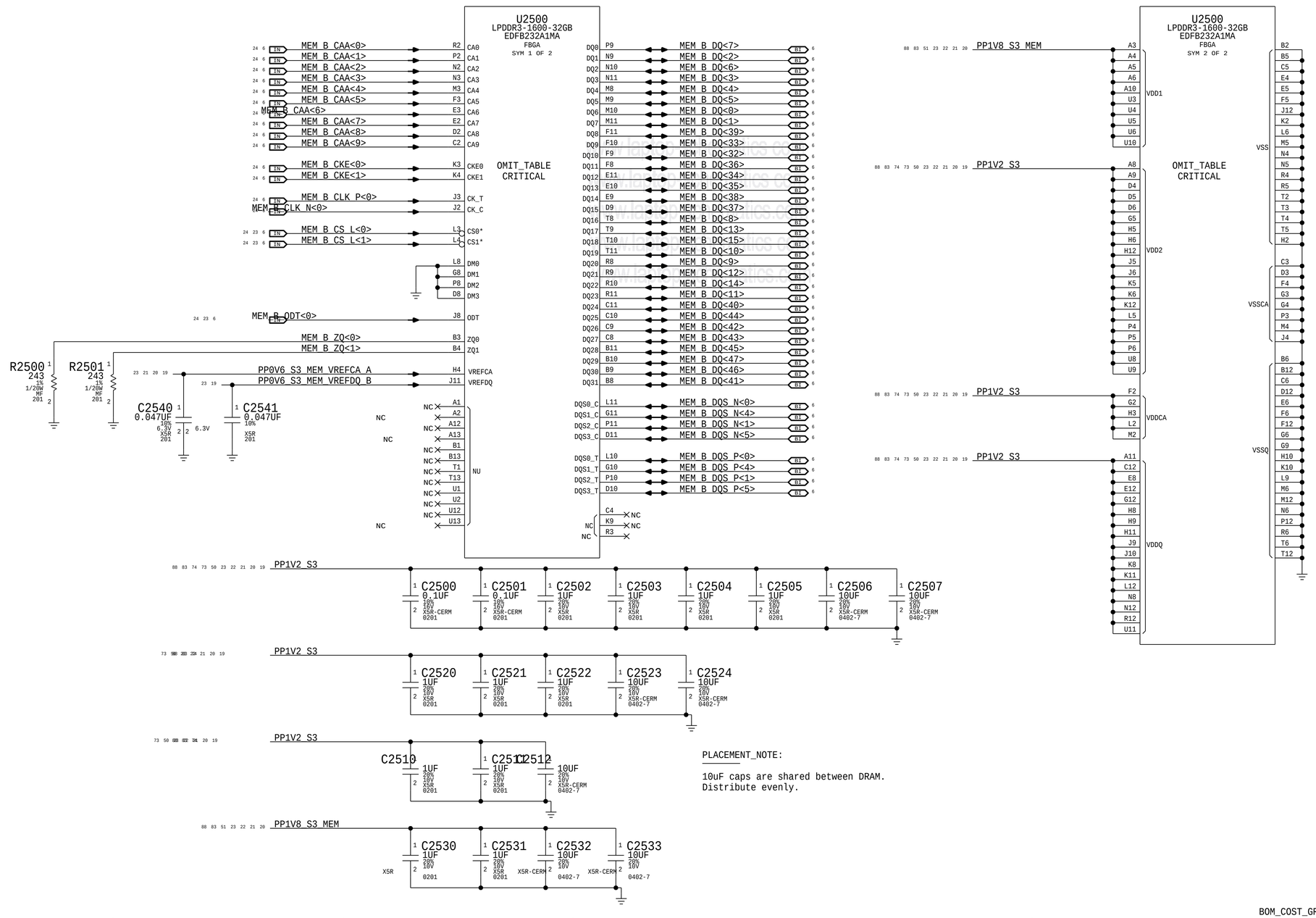

PLACEMENT_NOTE:

10uF caps are shared between DRAM.
Distribute evenly.

BOM_COST_GROUP=DRAM

SYNC_MASTER=J213_KEI SYNC_DATE=09/10/2018

PAGE TITLE
LPDDR3 DRAM Channel B (00-31)

Apple Inc.

NOTICE OF PROPRIETARY PROPERTY:
THE INFORMATION CONTAINED HEREIN IS THE PROPRIETARY PROPERTY OF APPLE INC.
THE POSESSOR AGREES TO THE FOLLOWING:
I TO MAINTAIN THIS DOCUMENT IN CONFIDENCE
II NOT TO REPRODUCE OR COPY IT
III NOT TO REVEAL OR PUBLISH IT IN WHOLE OR PART
IV ALL RIGHTS RESERVED

DRAWING NUMBER 051-04273
SIZE D
REVISION 4.0.0
BRANCH evt-1
PAGE 25 OF 500
SHEET 22 OF 98

LPDDR3 CHANNEL B (32-63)

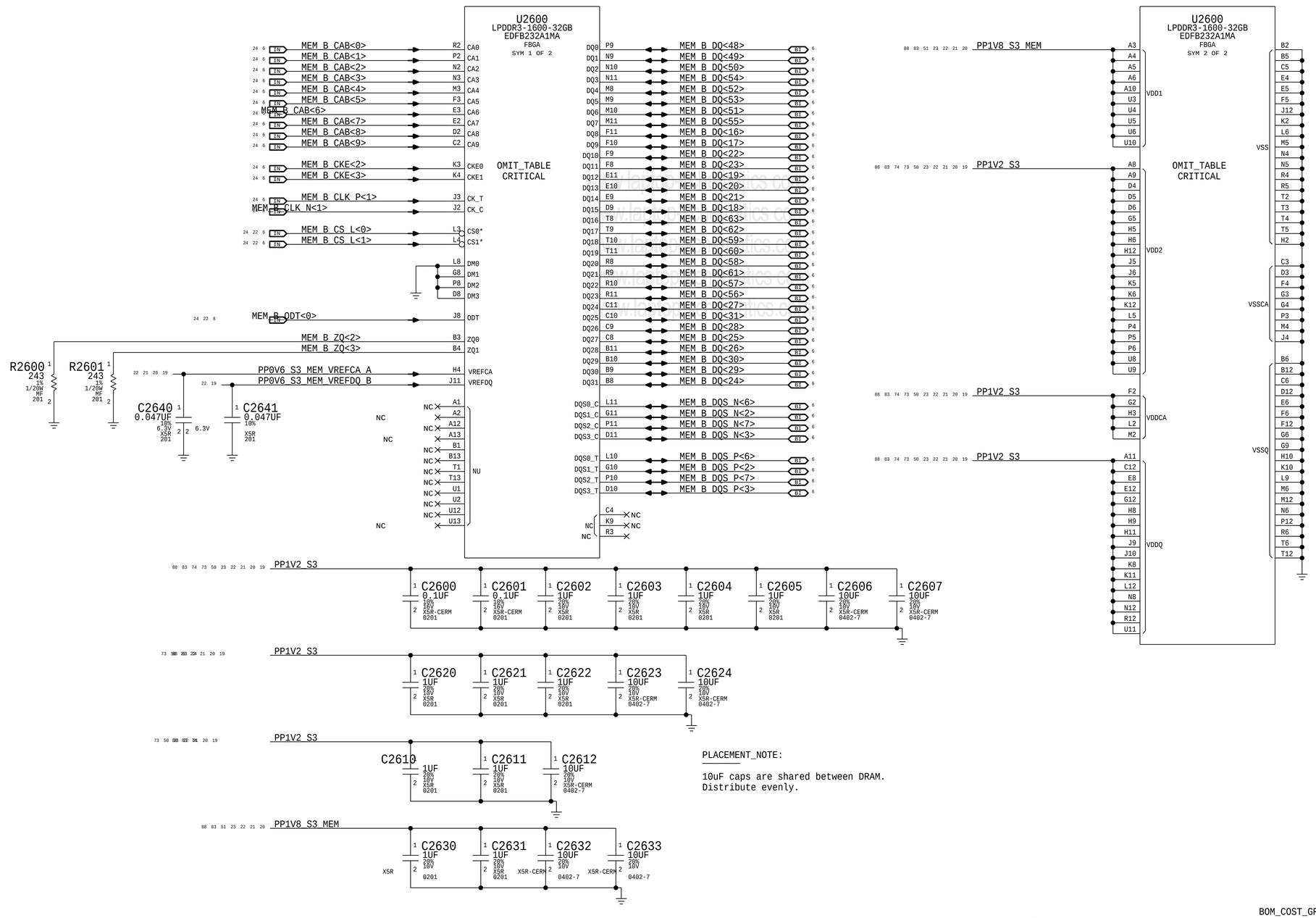

PLACEMENT_NOTE:

10uF caps are shared between DRAM.
Distribute evenly.

BOM_COST_GROUP=DRAM

SYNC_MASTER=J213_KEI SYNC_DATE=09/10/2018

PAGE TITLE
LPDDR3 DRAM Channel B (32-63)

Apple Inc.

DRAWING NUMBER 051-04273
SIZE D
REVISION 4.0.0
BRANCH evt-1
PAGE 26 OF 500
SHEET 23 OF 98

NOTICE OF PROPRIETARY PROPERTY:
THE INFORMATION CONTAINED HEREIN IS THE PROPRIETARY PROPERTY OF APPLE INC.
THE POSESSOR AGREES TO THE FOLLOWING:
I TO MAINTAIN THIS DOCUMENT IN CONFIDENCE
II NOT TO REPRODUCE OR COPY IT
III NOT TO REVEAL OR PUBLISH IT IN WHOLE OR PART
IV ALL RIGHTS RESERVED

Intel recommends 68 Ohm for CMD/ADDR, 80 Ohm for CTRL/CKE, 38 Ohm for CLK

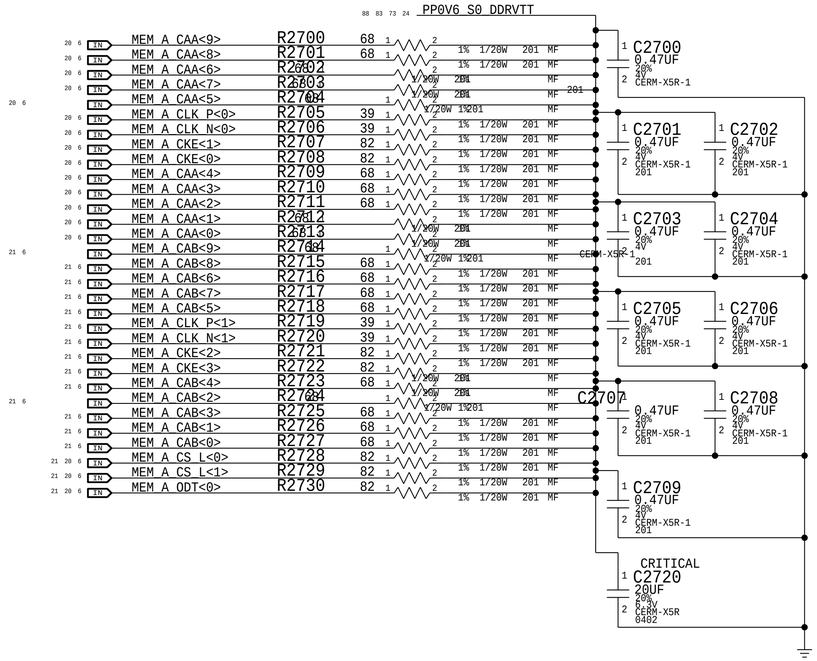

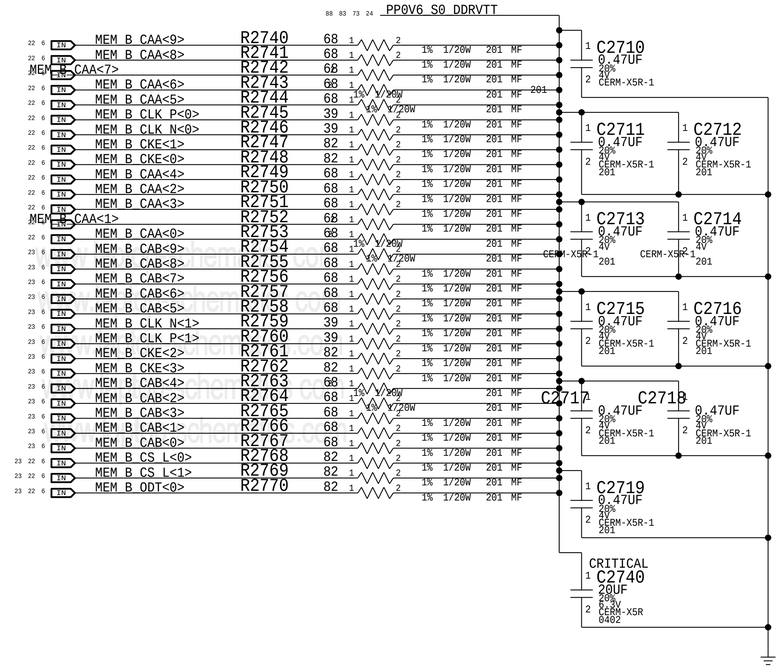

BOM_COST_GROUP=DRAM

SYNC_MASTER=J213_JOHN SYNC_DATE=06/05/2018

PAGE TITLE

LPDDR3 DRAM Termination

Apple Inc.

DRAWING NUMBER 051-04273 SIZE D

REVISION 4.0.0

BRANCH evt-1

PAGE 27 OF 500

SHEET 24 OF 98

NOTICE OF PROPRIETARY PROPERTY:
THE INFORMATION CONTAINED HEREIN IS THE PROPRIETARY PROPERTY OF APPLE INC.
THE POSESSOR AGREES TO THE FOLLOWING:
I TO MAINTAIN THIS DOCUMENT IN CONFIDENCE
II NOT TO REPRODUCE OR COPY IT
III NOT TO REVEAL OR PUBLISH IT IN WHOLE OR PART
IV ALL RIGHTS RESERVED

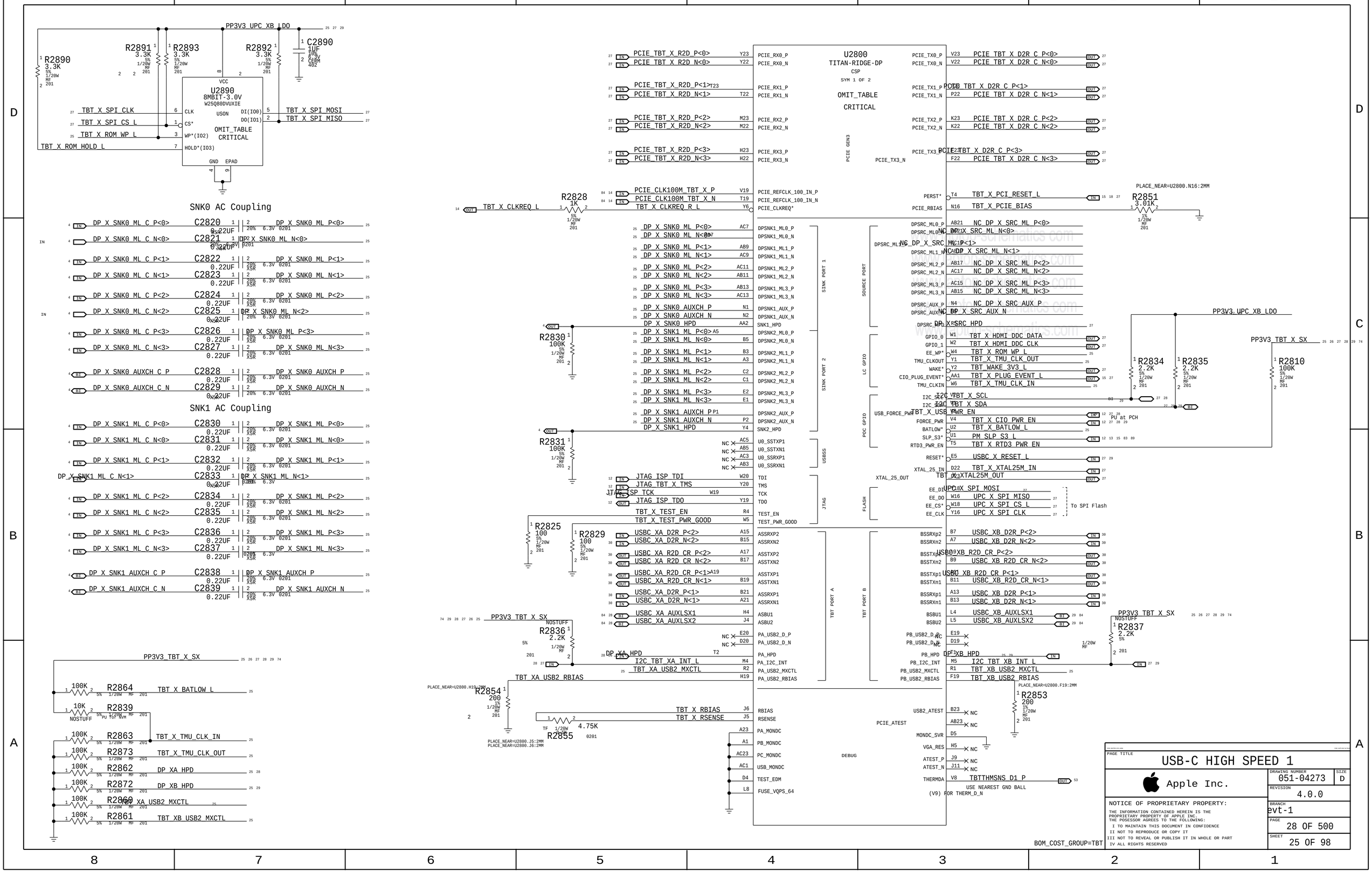
PP3V3_UPC_XB_LDO
R2890 3.3K
R2891 3.3K
R2893 3.3K
R2892 3.3K
C2890 1UF
U2890 8MBIT-3.0V W25Q80DVUXIE USON
OMIT_TABLE CRITICAL
TBT_X_SPI_CLK
TBT_X_SPI_CS_L
TBT_X_ROM_WP_L
TBT_X_ROM_HOLD_L
TBT_X_SPI_MOSI
TBT_X_SPI_MISO
U2800 TITAN-RIDGE-DP CSP SYM 1 OF 2
OMIT_TABLE CRITICAL
PCIE GEN3
SINK PORT 1
SINK PORT 2
USB3S
JTAG
FLASH
TBT PORT A
TBT PORT B
SOURCE PORT
LC GPIO
POC GPIO
DEBUG
PCIE_TBT_X_R2D_P<0>
PCIE_TBT_X_R2D_N<0>
PCIE_TBT_X_R2D_P<1>
PCIE_TBT_X_R2D_N<1>
PCIE_TBT_X_R2D_P<2>
PCIE_TBT_X_R2D_N<2>
PCIE_TBT_X_R2D_P<3>
PCIE_TBT_X_R2D_N<3>
PCIE_TBT_X_D2R_C_P<0>
PCIE_TBT_X_D2R_C_N<0>
PCIE_TBT_X_D2R_C_P<1>
PCIE_TBT_X_D2R_C_N<1>
PCIE_TBT_X_D2R_C_P<2>
PCIE_TBT_X_D2R_C_N<2>
PCIE_TBT_X_D2R_C_P<3>
PCIE_TBT_X_D2R_C_N<3>
PCIE_CLK100M_TBT_X_P
PCIE_CLK100M_TBT_X_N
TBT_X_CLKREQ_L
R2828 1K
TBT_X_PCI_RESET_L
TBT_X_PCIE_BIAS
R2851 3.01K
PLACE_NEAR=U2800.N16:2MM
SNK0 AC Coupling
SNK1 AC Coupling
DP_X_SNK0_HPD
DP_X_SNK1_HPD
R2830 100K
R2831 100K
JTAG_ISP_TDI
JTAG_TBT_X_TMS
JTAG_ISP_TCK
JTAG_ISP_TDO
TBT_X_TEST_EN
TBT_X_TEST_PWR_GOOD
R2825 100
R2829 100
USBC_XA_D2R_P<2>
USBC_XA_D2R_N<2>
USBC_XA_R2D_CR_P<2>
USBC_XA_R2D_CR_N<2>
USBC_XA_R2D_CR_P<1>
USBC_XA_R2D_CR_N<1>
USBC_XA_D2R_P<1>
USBC_XA_D2R_N<1>
USBC_XA_AUXLSX1
USBC_XA_AUXLSX2
USBC_XB_D2R_P<2>
USBC_XB_D2R_N<2>
USBC_XB_R2D_CR_P<2>
USBC_XB_R2D_CR_N<2>
USBC_XB_R2D_CR_P<1>
USBC_XB_R2D_CR_N<1>
USBC_XB_D2R_P<1>
USBC_XB_D2R_N<1>
USBC_XB_AUXLSX1
USBC_XB_AUXLSX2
PP3V3_TBT_X_SX
R2836 2.2K
DP_XA_HPD
I2C_TBT_XA_INT_L
TBT_XA_USB2_MXCTL
TBT_XA_USB2_RBIAS
R2854 200
TBT_X_RBIAS
TBT_X_RSENSE
R2855 4.75K
R2837 2.2K
DP_XB_HPD
I2C_TBT_XB_INT_L
TBT_XB_USB2_MXCTL
TBT_XB_USB2_RBIAS
R2853 200
R2834 2.2K
R2835 2.2K
R2810 100K
PU at PCH
To SPI Flash
R2864 100K
TBT_X_BATLOW_L
R2839 10K
NOSTUFF
PU to PMVM
R2863 100K
TBT_X_TMU_CLK_IN
R2873 100K
TBT_X_TMU_CLK_OUT
R2862 100K
DP_XA_HPD
R2872 100K
DP_XB_HPD
R2860 100K
TBT_XA_USB2_MXCTL
R2861 100K
TBT_XB_USB2_MXCTL
BOM_COST_GROUP=TBT
PAGE TITLE
USB-C HIGH SPEED 1
Apple Inc.
DRAWING NUMBER 051-04273
SIZE D
REVISION 4.0.0
BRANCH evt-1
PAGE 28 OF 500
SHEET 25 OF 98
NOTICE OF PROPRIETARY PROPERTY:
THE INFORMATION CONTAINED HEREIN IS THE PROPRIETARY PROPERTY OF APPLE INC.
THE POSESSOR AGREES TO THE FOLLOWING:
I TO MAINTAIN THIS DOCUMENT IN CONFIDENCE
II NOT TO REPRODUCE OR COPY IT
III NOT TO REVEAL OR PUBLISH IT IN WHOLE OR PART
IV ALL RIGHTS RESERVED

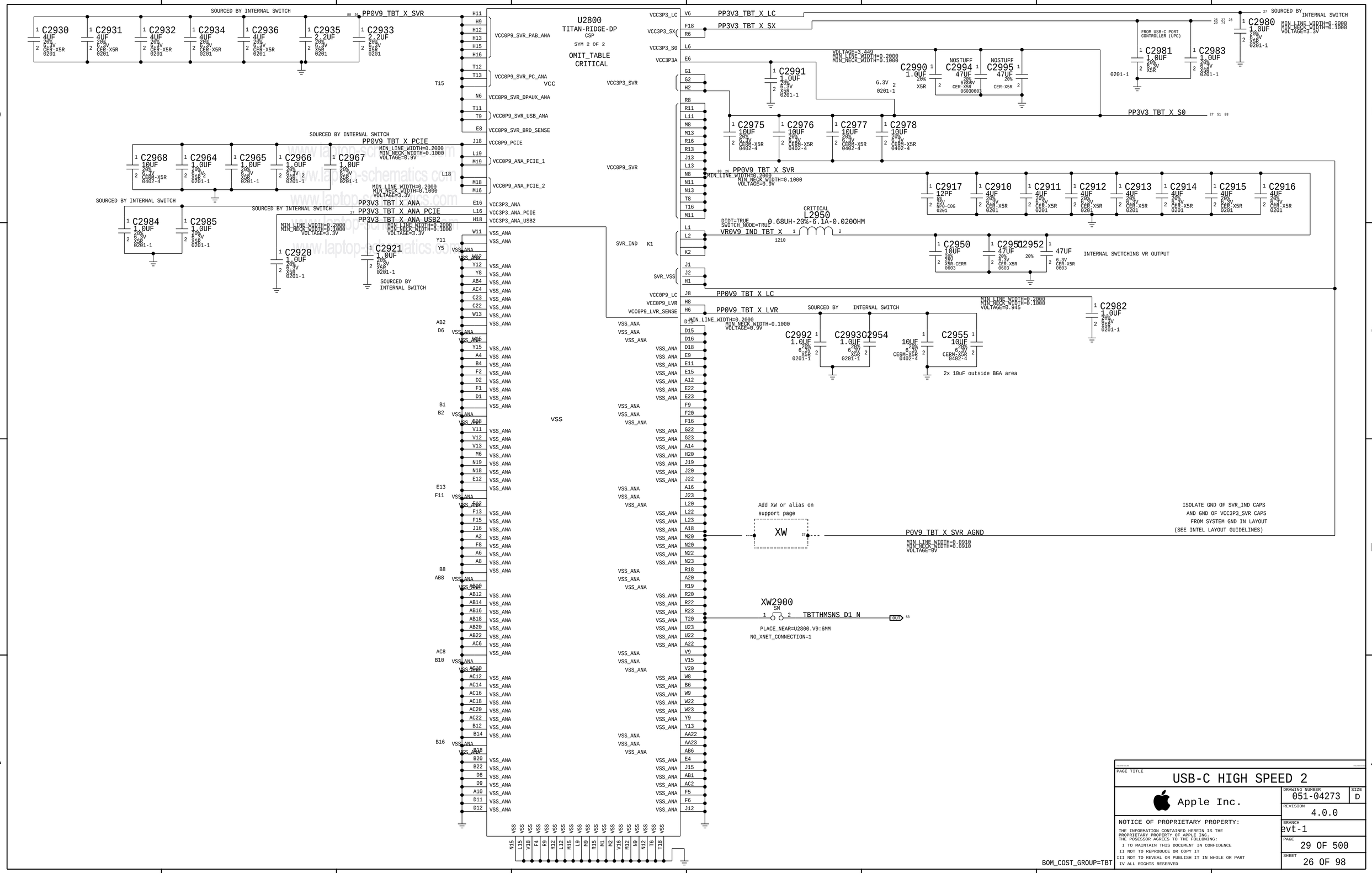

PAGE TITLE
USB-C HIGH SPEED 2

Apple Inc.

DRAWING NUMBER 051-04273
SIZE D
REVISION 4.0.0
BRANCH evt-1
PAGE 29 OF 500
SHEET 26 OF 98

NOTICE OF PROPRIETARY PROPERTY:
THE INFORMATION CONTAINED HEREIN IS THE PROPRIETARY PROPERTY OF APPLE INC.
THE POSESSOR AGREES TO THE FOLLOWING:
I TO MAINTAIN THIS DOCUMENT IN CONFIDENCE
II NOT TO REPRODUCE OR COPY IT
III NOT TO REVEAL OR PUBLISH IT IN WHOLE OR PART
IV ALL RIGHTS RESERVED

USB VBUS Detect

PP1V8_AWAKE — R3081 0 (5% MF 1/20W 0201) — PP20V_USBC_XA_VBUS (<rdar://25149752>) — R3080 30K (NOSTUFF 5% 1/20W MF 201) — SOC_USB_VBUS

D3001 BZT52C3V0LP-COMBO (DFN1006, I1023) K A — NOSTUFF

Ridge 0.9V SVR XW

XW3001 (SHORT-L6-SM, NO_XNET_CONNECTION=1) — P0V9_TBT_X_SVR_AGND

DP SRC OPTIONS

DP_X_SRC_HPD — R3040 100K (5% 1/20W MF 201)

TR XTAL

TBT_X_XTAL25M_OUT — C3002 20PF (5% 25V C0G 0201)

CRITICAL Y3000 25MHZ-25PPM-20PF-50OHM (2.00X1.60-SM)

C3003 20PF (5% 25V C0G 0201) — TBT_X_XTAL25M_IN

PP1V8_SLPS2R / PP3V3_G3H_RTC

PP3V3_G3H_RTC — R3065 100K (201 MF 1/20W 5%)

TBT_WAKE_L (SMC HAS IPU) — Q3001 DMN2250UFB (DFN1006-3) — TBT_WAKE_3V3_L

RIDGE TBT X ARKANOID CONN

USBC_ARKANOID J3001 505070-1222 (M-ST-SM)

TBT_X_PLUG_EVENT_L	1	2	TBT_X_PCI_RESET_L
TBT_WAKE_3V3_L	3	4	USBC_X_RESET_L
TBT_X_CIO_PWR_EN	5	6	PP3V3_TBT_X_SX
TBT_X_USB_PWR_EN	7	8	PP3V3_TBT_X_LC
TBT_POC_RESET	9	10	PP3V3_TBT_X_ANA_PCIE
PP3V3_TBT_X_S0	11	12	TBT_X_HDMI_DDC_DATA
	13	14	
	15	16	

ACE2 ARKANOID DEBUG CONN

USBC_ARKANOID J3000 505070-1222 (M-ST-SM)

I2C_TBT_XB_INT_L	1	2	I2C_TBT_XA_INT_L
I2C_UPC_X_SCL2	3	4	I2C_TBT_X_SDA
I2C_UPC_X_SDA2	5	6	I2C_TBT_X_SCL
UPC_I2C_INT_L	7	8	UPC_XA_SER_DBG
TBT_X_SPI_ARK_CLK	9	10	UPC_XB_SER_DBG
UPC_XA_UART_TX	11	12	UPC_XA_UART_RX
	13	14	
	15	16	

DEBUG PATHS

PCH USB3 (DCI) — XB UPC DBG [3:0]

USB3_BSSB_D2R_P	R3012 0 (5% 1/20W MF 0201)	USB3_BSSB_D2R_R_P	
USB3_BSSB_D2R_N	R3013 0 (5% 1/20W MF 0201)	USB3_BSSB_D2R_R_N	
USB3_BSSB_R2D_C_P	C3010 0.1UF (10% 16V X5R-CERM 0201)	USB3_BSSB_R2D_P	
USB3_BSSB_R2D_C_N	C3011 0.1UF (10% 16V X5R-CERM 0201)	USB3_BSSB_R2D_N	

H9M — XB UPC DBG [5:4]

SWD_SOC_DEBUG_SWCLK	R3014 0 (PLACE_NEAR=U3100.B3:5MM, 5% 1/20W MF 0201)	SWD_SOC_SWCLK_XB
SWD_SOC_DEBUG_SWDIO	R3015 0 (PLACE_NEAR=U3100.F15:5MM, 5% 1/20W MF 0201)	SWD_SOC_SWDIO_XB

PCH UART 2 — XA UPC DBG [7:6]

PCH_UART_DEBUG_R2D	R3016 0 (PLACE_NEAR=U3100.D15:5MM, 5% 1/20W MF 0201)	PCH_UART_DEBUG_R_R2D
PCH_UART_DEBUG_D2R	R3017 0 (5% 1/20W MF 0201, PLACE_NEAR=U3100.D19:5MM)	PCH_UART_DEBUG_R_D2R

ACE2 PULL DOWNS

R3039	100K (5% 1/20W MF 201)	PD_UPC_XA_GPIO4
R3038	100K (5% 1/20W MF 201)	PD_UPC_XB_GPIO1
R3037	100K (5% 1/20W MF 201)	PD_UPC_XB_GPIO4
R3036	100K (5% 1/20W MF 201)	PD_UPC_XB_GPIO9
R3035	100K (5% 1/20W MF 201)	PD_UPC_XB_GPIO10
R3034	100K (5% 1/20W MF 201)	PD_UPC_X_5V_EN
R3033	100K (5% 1/20W MF 201)	SPARE_UPC_XA_USB3_RN
R3032	100K (5% 1/20W MF 201)	SPARE_UPC_XA_USB3_RP
R3031	100K (5% 1/20W MF 201)	SPARE_UPC_XB_USB3_RN
R3030	100K (5% 1/20W MF 201)	SPARE_UPC_XB_USB3_RP
R3029	100K (5% 1/20W MF 201)	SPARE_UPC_XB_USB2_RN
R3028	100K (5% 1/20W MF 201)	SPARE_UPC_XB_USB2_RP
R3027	100K (5% 1/20W MF 201)	SPARE_UPC_XA_DBG0_R
R3026	100K (5% 1/20W MF 201)	SPARE_UPC_XA_DBG1_R
R3025	100K (5% 1/20W MF 201)	SPARE_UPC_XA_DBG2_R
R3024	100K (5% 1/20W MF 201)	SPARE_UPC_XA_DBG3_R
R3023	0 (NOSTUFF 5% 1/20W MF 0201)	UPC_XA_VDDIO_CFG
R3022	0 (NOSTUFF 5% 1/20W MF 0201)	UPC_XB_VDDIO_CFG
R3021	0 (5% 1/20W MF 0201)	UPC_XA_RESET
R3020	0 (5% 1/20W MF 0201)	UPC_XB_RESET

AARDVARKANOID CONN

USBC_AARDVARKANOID J3002 505070-1222 (M-ST-SM)

PP3V3_UPC_XB_LDO	1	2	TBT_X_SPI_DBG_CS_L
UPC_XB_SWD_DATA	3	4	TBT_X_SPI_DBG_CLK
UPC_XB_SWD_CLK	5	6	TBT_X_SPI_DBG_MOSI
TBT_X_SPI_DBG_MISO	7	8	UPC_XA_SWD_CLK
I2C_TBT_X_SDA	9	10	UPC_XA_SWD_DATA
I2C_TBT_X_SCL	11	12	PP3V3_UPC_XA_LDO
	13	14	
	15	16	

RIDGE PULL UP/DOWN

PP3V3_TBT_X_S0

R3043	100K (5% 1/20W MF 201)	TBT_X_HDMI_DDC_CLK
R3044	100K (5% 1/20W MF 201)	TBT_X_HDMI_DDC_DATA

X ACE-SMC I2C SERIES R'S

I2C_UPC_SDA (PLACE_NEAR=U3200.B7:7MM)	R3045 0 (5% 1/20W MF 0201, CKPLUS_WAIVE=I2C_PULLUP)	I2C_UPC_X_SDA2
I2C_UPC_SCL (PLACE_NEAR=U3200.A6:7MM)	R3046 0 (5% 1/20W MF 0201, CKPLUS_WAIVE=I2C_PULLUP)	I2C_UPC_X_SCL2

FOR LAYOUT PURPOSES: DIRECTLY CONNECT TO XB
THEN BRANCH OFF TO XA AND ARKANOID CONNECTOR

USB2 OC

UPC_XA_FAULT_L	R3047 0 (5% 1/20W MF 0201)	UPC_XA_FAULT_L_R
UPC_XB_FAULT_L	R3048 0 (5% 1/20W MF 0201)	UPC_XB_FAULT_L_R

FUSES FOR UPC

PPDCIN_G3H — F3000 6A-32V (PLACE_NEAR=U3100:5MM) — PPDCIN_XA_G3H_F

C3020 0.1UF (10% 35V CER-X5R 0201) CRITICAL

PPDCIN_G3H — F3001 6A-32V 740S00053 (PLACE_NEAR=U3200:5MM) — PPDCIN_XB_G3H_F

C3021 0.1UF (10% 35V CER-X5R 0201) CRITICAL

ARKANOID / AARDVARKANOID / ROM / XB ACE / TR

ARKANOID (USBC_ARKANOID)	R3094 100 (5% 1/20W MF 201)	TBT_X_SPI_ARK_CLK	
AARDVARKANOID (USBC_AARDVARKANOID)	R3086 15 (5% 1/20W MF 201)	TBT_X_SPI_DBG_CLK	
	R3087 15 (5% 1/20W MF 201)	TBT_X_SPI_DBG_CS_L	
	R3088 15 (5% 1/20W MF 201)	TBT_X_SPI_DBG_MOSI	
	R3089 15 (5% 1/20W MF 201)	TBT_X_SPI_DBG_MISO	
ROM			XB ACE
TBT_X_SPI_CLK	R3095 15 (5% 1/20W MF 201)	UPC_XB_SPI_CLK	
TBT_X_SPI_CS_L	R3096 15 (5% 1/20W MF 201)	UPC_XB_SPI_CS_L	
TBT_X_SPI_MOSI	R3097 15 (5% 1/20W MF 201)	UPC_XB_SPI_MOSI	
TBT_X_SPI_MISO	R3098 15 (5% 1/20W MF 201)	UPC_XB_SPI_MISO	
			TR
	R3090 15 (5% 1/20W MF 201)	UPC_X_SPI_CLK	
	R3091 15 (5% 1/20W MF 201)	UPC_X_SPI_CS_L	
	R3092 15 (5% 1/20W MF 201)	UPC_X_SPI_MOSI	
	R3093 15 (5% 1/20W MF 201)	UPC_X_SPI_MISO	

Ridge PCIE Caps

D2R

PCIE_TBT_X_D2R_C_P<0>	C3050 0.22UF (0201 X5R 6.3V 20%)	PCIE_TBT_X_D2R_P<0>
PCIE_TBT_X_D2R_C_N<0>	C3051 0.22UF (0201 X5R 6.3V 20%)	PCIE_TBT_X_D2R_N<0>
PCIE_TBT_X_D2R_C_P<1>	C3052 0.22UF (0201 X5R 6.3V 20%)	PCIE_TBT_X_D2R_P<1>
PCIE_TBT_X_D2R_C_N<1>	C3053 0.22UF (0201 X5R 6.3V 20%)	PCIE_TBT_X_D2R_N<1>
PCIE_TBT_X_D2R_C_P<2>	C3054 0.22UF (0201 X5R 6.3V 20%)	PCIE_TBT_X_D2R_P<2>
PCIE_TBT_X_D2R_C_N<2>	C3055 0.22UF (0201 X5R 6.3V 20%)	PCIE_TBT_X_D2R_N<2>
PCIE_TBT_X_D2R_C_P<3>	C3056 0.22UF (0201 X5R 6.3V 20%)	PCIE_TBT_X_D2R_P<3>
PCIE_TBT_X_D2R_C_N<3>	C3057 0.22UF (0201 X5R 6.3V 20%)	PCIE_TBT_X_D2R_N<3>

R2D

PCIE_TBT_X_R2D_C_P<0>	C3040 0.22UF (0201 X5R 6.3V 20%)	PCIE_TBT_X_R2D_P<0>
PCIE_TBT_X_R2D_C_N<0>	C3041 0.22UF (0201 X5R 6.3V 20%)	PCIE_TBT_X_R2D_N<0>
PCIE_TBT_X_R2D_C_P<1>	C3042 0.22UF (0201 X5R 6.3V 20%)	PCIE_TBT_X_R2D_P<1>
PCIE_TBT_X_R2D_C_N<1>	C3043 0.22UF (0201 X5R 6.3V 20%)	PCIE_TBT_X_R2D_N<1>
PCIE_TBT_X_R2D_C_P<2>	C3044 0.22UF (0201 X5R 6.3V 20%)	PCIE_TBT_X_R2D_P<2>
PCIE_TBT_X_R2D_C_N<2>	C3045 0.22UF (0201 X5R 6.3V 20%)	PCIE_TBT_X_R2D_N<2>
PCIE_TBT_X_R2D_C_P<3>	C3046 0.22UF (0201 X5R 6.3V 20%)	PCIE_TBT_X_R2D_P<3>
PCIE_TBT_X_R2D_C_N<3>	C3047 0.22UF (0201 X5R 6.3V 20%)	PCIE_TBT_X_R2D_N<3>

BOM_COST_GROUP=TBT

PAGE TITLE: USB-C SUPPORT

Apple Inc.

DRAWING NUMBER: 051-04273 — SIZE: D
REVISION: 4.0.0
BRANCH: evt-1
PAGE: 30 OF 500
SHEET: 27 OF 98

NOTICE OF PROPRIETARY PROPERTY:
THE INFORMATION CONTAINED HEREIN IS THE PROPRIETARY PROPERTY OF APPLE INC.
THE POSESSOR AGREES TO THE FOLLOWING:
I TO MAINTAIN THIS DOCUMENT IN CONFIDENCE
II NOT TO REPRODUCE OR COPY IT
III NOT TO REVEAL OR PUBLISH IT IN WHOLE OR PART
IV ALL RIGHTS RESERVED

www.laptop-schematics.com

PRIMARY USB-C PORT CONTROLLER (UPC) [FRONT LEFT]

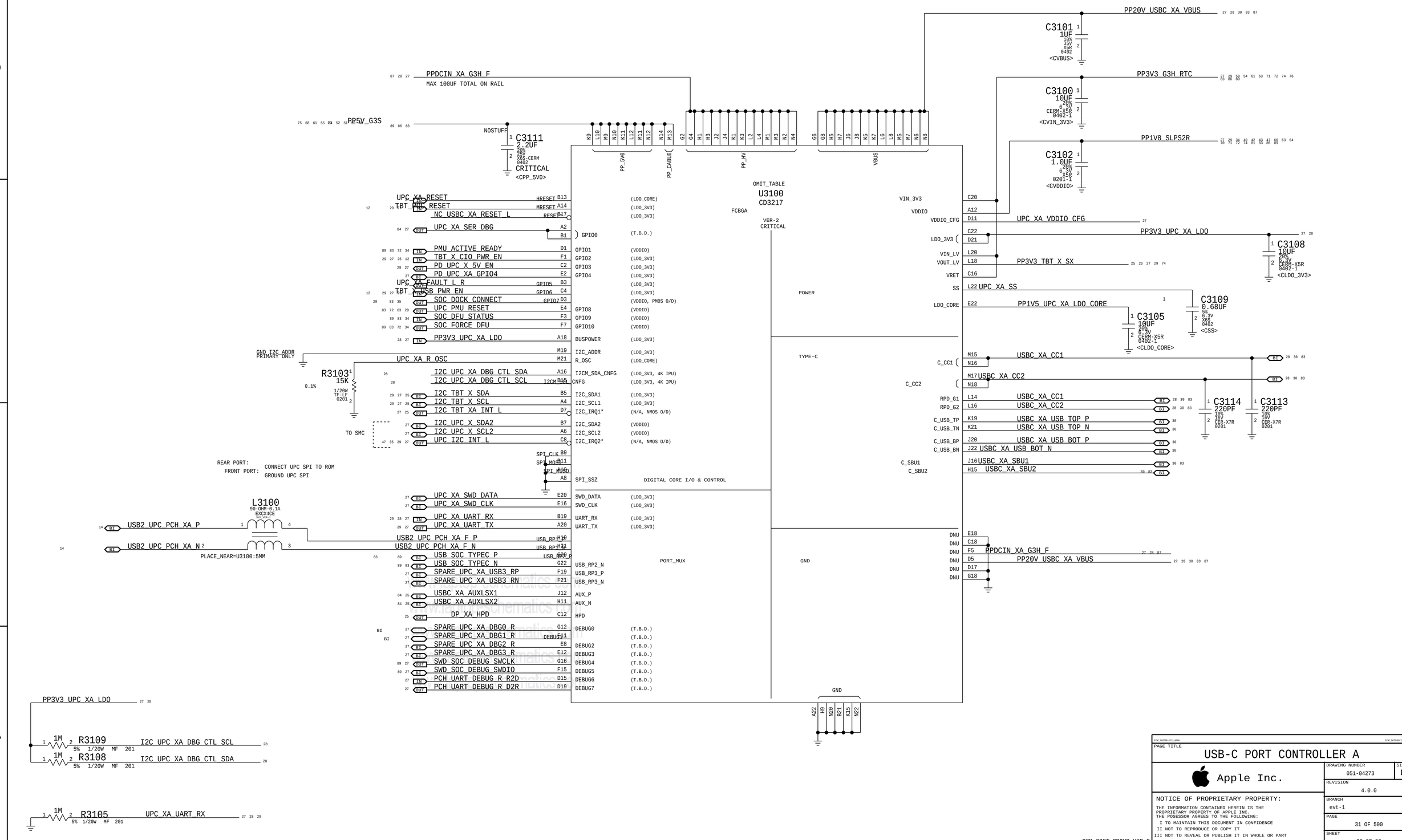

PAGE TITLE

USB-C PORT CONTROLLER A

Apple Inc.

DRAWING NUMBER	051-04273
SIZE	D
REVISION	4.0.0
BRANCH	evt-1
PAGE	31 OF 500
SHEET	28 OF 98

NOTICE OF PROPRIETARY PROPERTY:
THE INFORMATION CONTAINED HEREIN IS THE PROPRIETARY PROPERTY OF APPLE INC.
THE POSESSOR AGREES TO THE FOLLOWING:
I TO MAINTAIN THIS DOCUMENT IN CONFIDENCE
II NOT TO REPRODUCE OR COPY IT
III NOT TO REVEAL OR PUBLISH IT IN WHOLE OR PART
IV ALL RIGHTS RESERVED

SECONDARY USB-C PORT CONTROLLER (UPC) [REAR LEFT]

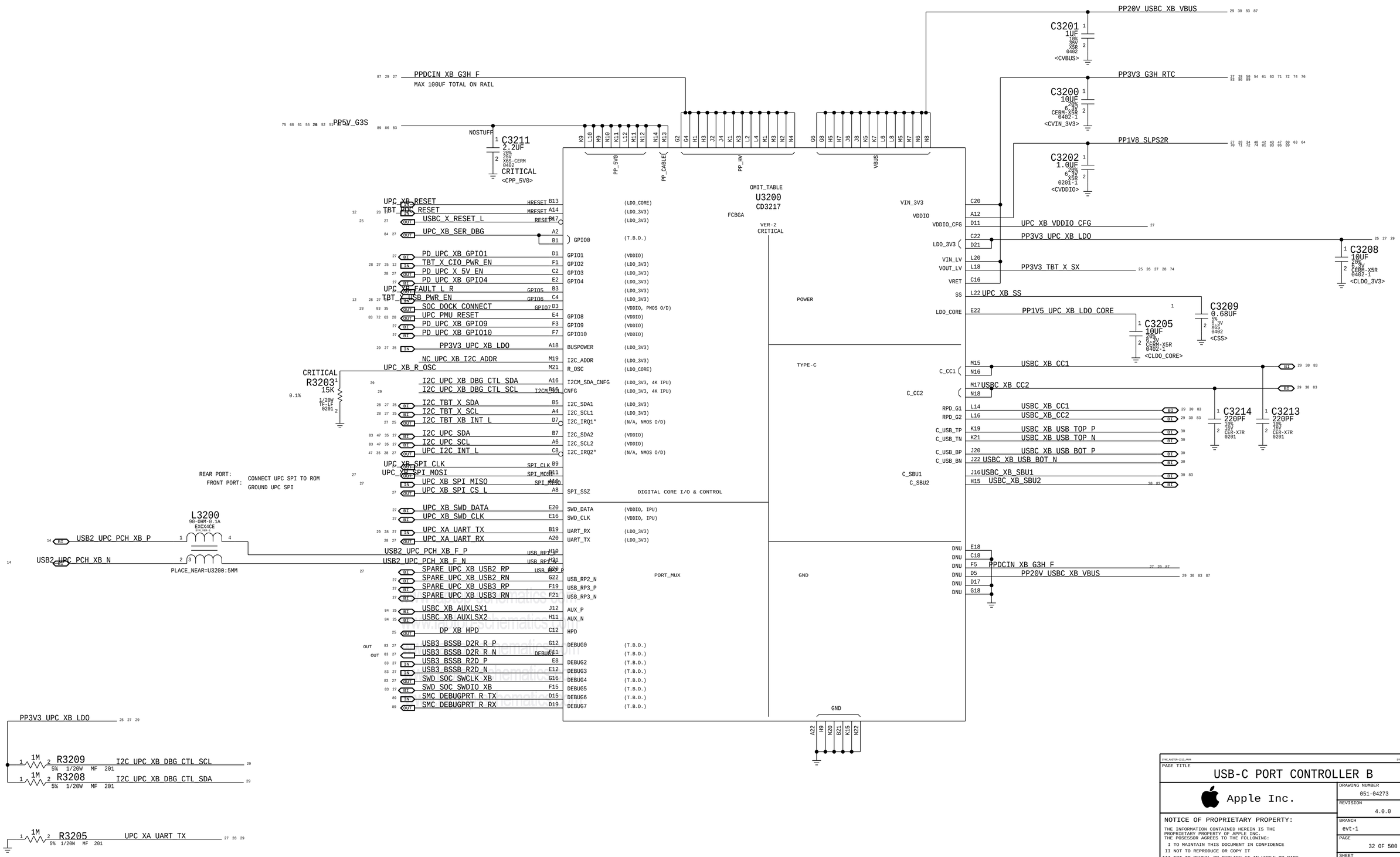

PAGE TITLE

USB-C PORT CONTROLLER B

Apple Inc.

DRAWING NUMBER 051-04273

SIZE D

REVISION 4.0.0

BRANCH evt-1

PAGE 32 OF 500

SHEET 29 OF 98

NOTICE OF PROPRIETARY PROPERTY:
THE INFORMATION CONTAINED HEREIN IS THE PROPRIETARY PROPERTY OF APPLE INC.
THE POSESSOR AGREES TO THE FOLLOWING:
I TO MAINTAIN THIS DOCUMENT IN CONFIDENCE
II NOT TO REPRODUCE OR COPY IT
III NOT TO REVEAL OR PUBLISH IT IN WHOLE OR PART
IV ALL RIGHTS RESERVED

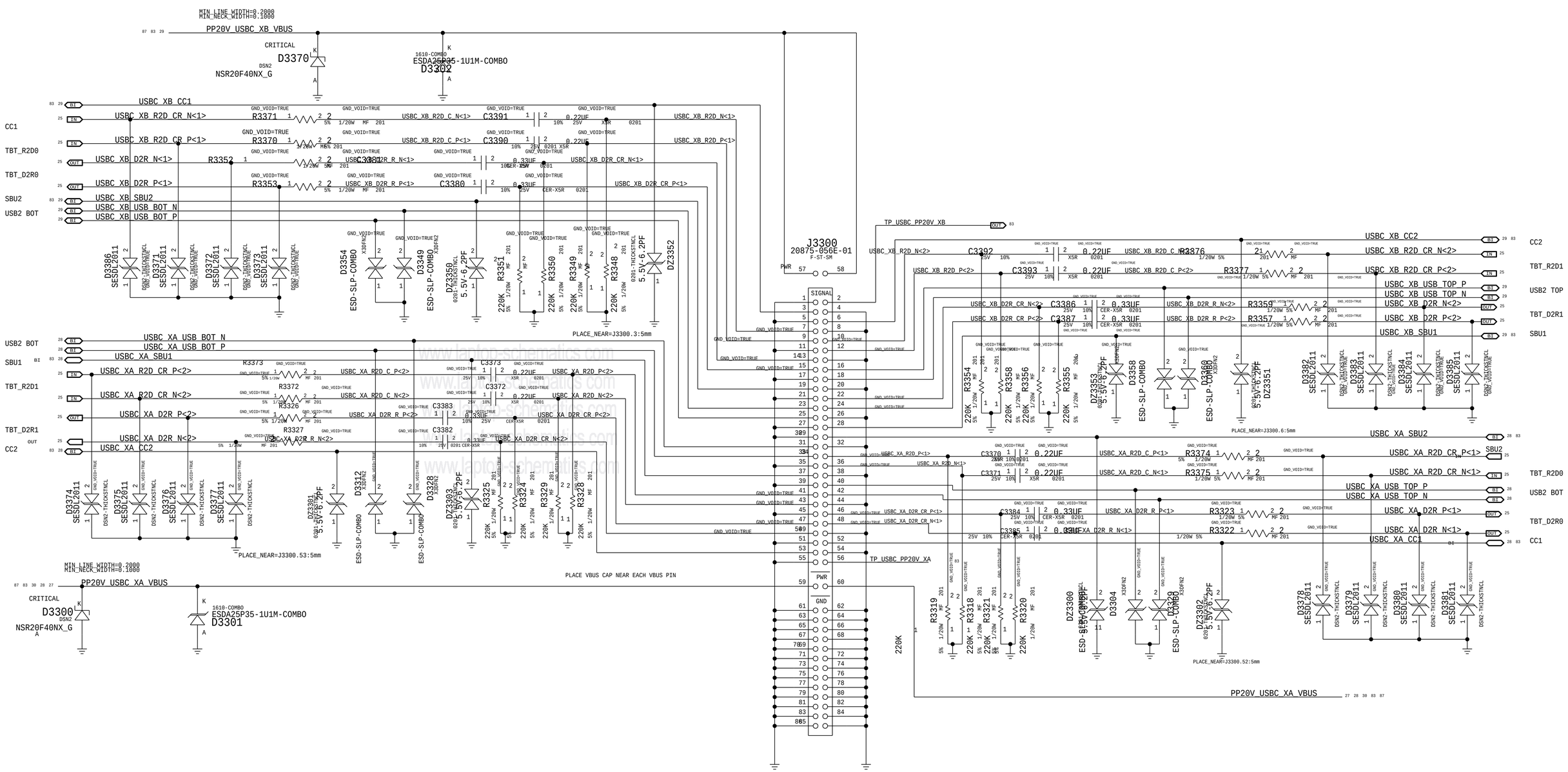

LAST CHANGE: Wed Apr 1 22:57:37 2015

PAGE TITLE

USB-C CONNECTOR A

Apple Inc.

DRAWING NUMBER 051-04273

SIZE D

REVISION 4.0.0

BRANCH evt-1

PAGE 33 OF 500

SHEET 30 OF 98

NOTICE OF PROPRIETARY PROPERTY:
THE INFORMATION CONTAINED HEREIN IS THE PROPRIETARY PROPERTY OF APPLE INC.
THE POSESSOR AGREES TO THE FOLLOWING:
I TO MAINTAIN THIS DOCUMENT IN CONFIDENCE
II NOT TO REPRODUCE OR COPY IT
III NOT TO REVEAL OR PUBLISH IT IN WHOLE OR PART
IV ALL RIGHTS RESERVED

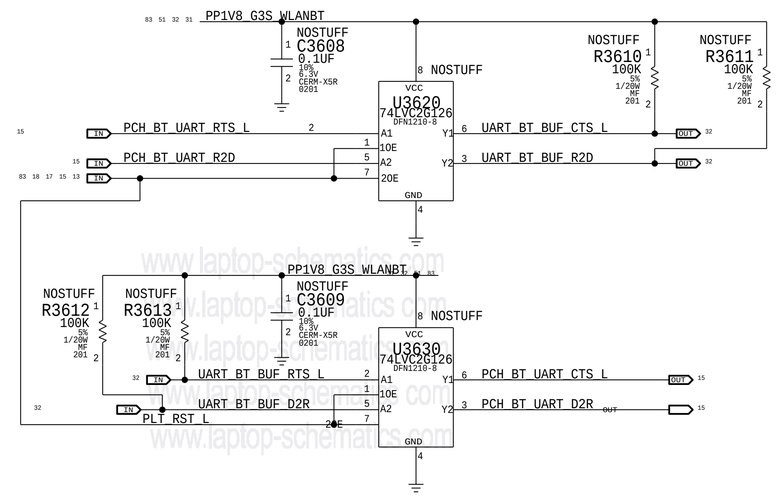

www.laptop-schematics.com

BOM_COST_GROUP=WIRELESS

PAGE TITLE

WIFI/BT SUPPORT

Apple Inc.

DRAWING NUMBER 051-04273

SIZE D

REVISION 4.0.0

BRANCH evt-1

PAGE 36 OF 500

SHEET 31 OF 98

NOTICE OF PROPRIETARY PROPERTY:
THE INFORMATION CONTAINED HEREIN IS THE PROPRIETARY PROPERTY OF APPLE INC.
THE POSESSOR AGREES TO THE FOLLOWING:
I TO MAINTAIN THIS DOCUMENT IN CONFIDENCE
II NOT TO REPRODUCE OR COPY IT
III NOT TO REVEAL OR PUBLISH IT IN WHOLE OR PART
IV ALL RIGHTS RESERVED

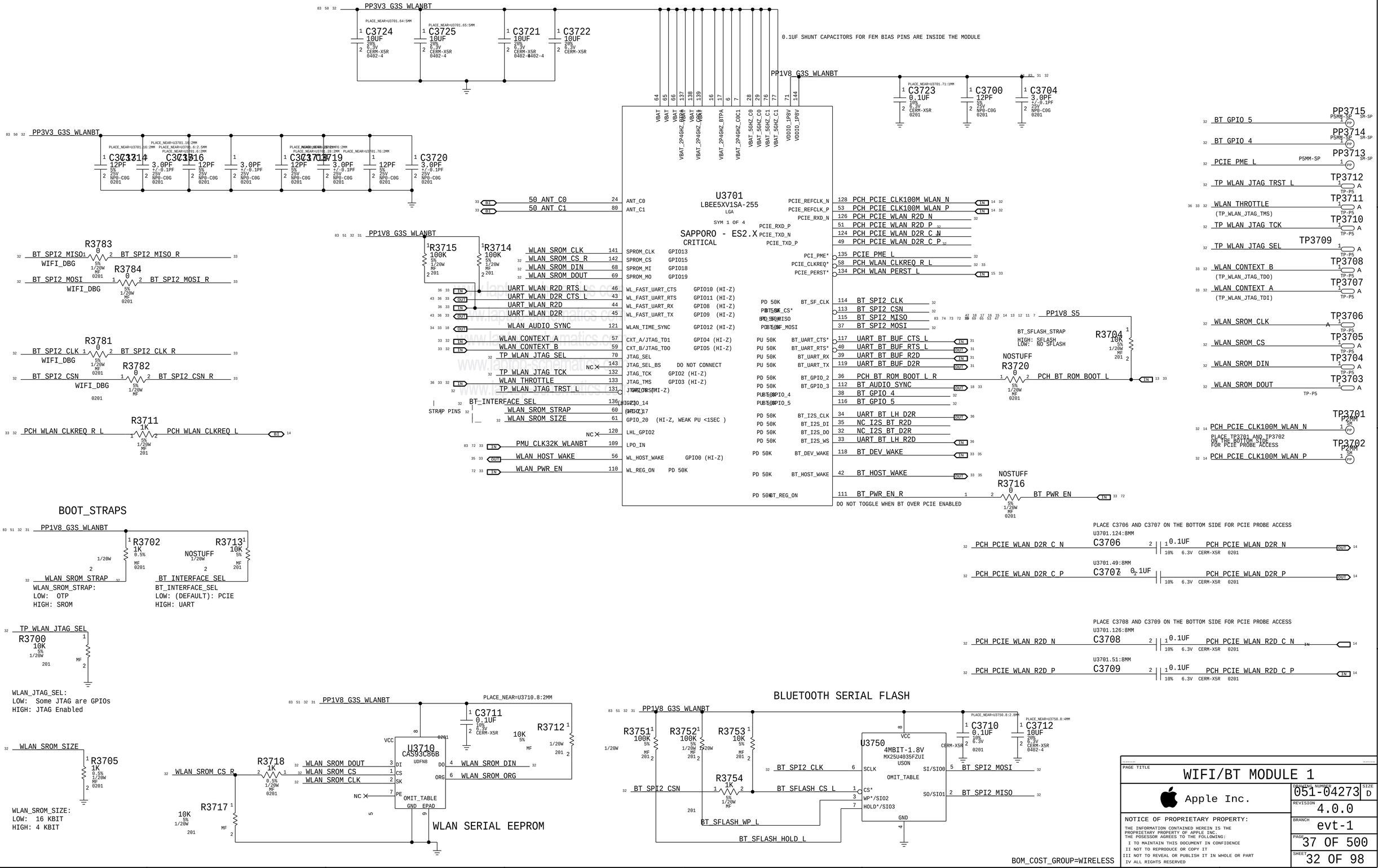
PP3V3_G3S_WLANBT
C3724 10UF 20% 6.3V CERM-X5R 0402-4
C3725 10UF 20% 6.3V CERM-X5R 0402-4
C3721 10UF 20% 6.3V CERM-X5R 0402-4
C3722 10UF 20% 6.3V CERM-X5R 0402-4
0.1UF SHUNT CAPACITORS FOR FEM BIAS PINS ARE INSIDE THE MODULE
PP1V8_G3S_WLANBT
C3723 0.1UF 10% 6.3V CERM-X5R 0201
C3700 12PF 5% 25V NP0-C0G 0201
C3704 3.0PF +/-0.1PF 25V NP0-C0G 0201
C3714 3.0PF +/-0.1PF 25V NP0-C0G 0201
C3716 12PF 5% 25V NP0-C0G 0201
C3720 3.0PF +/-0.1PF 25V NP0-C0G 0201
U3701
LBEE5XV1SA-255
LGA
SYM 1 OF 4
SAPPORO - ES2.X
CRITICAL
ANT_C0 24
ANT_C1 80
50_ANT_C0
50_ANT_C1
SPROM_CLK GPIO13
SPROM_CS GPIO15
SPROM_MI GPIO18
SPROM_MO GPIO19
WL_FAST_UART_CTS GPIO10 (HI-Z)
WL_FAST_UART_RTS GPIO11 (HI-Z)
WL_FAST_UART_RX GPIO8 (HI-Z)
WL_FAST_UART_TX GPIO9 (HI-Z)
WLAN_TIME_SYNC GPIO12 (HI-Z)
CXT_A/JTAG_TD1 GPIO4 (HI-Z)
CXT_B/JTAG_TDO GPIO5 (HI-Z)
JTAG_SEL
JTAG_SEL_BS DO NOT CONNECT
JTAG_TCK GPIO2 (HI-Z)
JTAG_TMS GPIO3 (HI-Z)
JTAG_TRST GPIO1 (HI-Z)
GPIO_14 (HI-Z)
GPIO_17 (HI-Z)
GPIO_20 (HI-Z, WEAK PU <1SEC)
LHL_GPIO2
LPO_IN
WL_HOST_WAKE GPIO0 (HI-Z)
WL_REG_ON PD 50K
PCIE_REFCLK_N 128 PCH_PCIE_CLK100M_WLAN_N
PCIE_REFCLK_P 53 PCH_PCIE_CLK100M_WLAN_P
PCIE_RXD_N 126 PCH_PCIE_WLAN_R2D_N
PCIE_RXD_P 51 PCH_PCIE_WLAN_R2D_P
PCIE_TXD_N 124 PCH_PCIE_WLAN_D2R_C_N
PCIE_TXD_P 49 PCH_PCIE_WLAN_D2R_C_P
PCI_PME* 135 PCIE_PME_L
PCIE_CLKREQ* 58 PCH_WLAN_CLKREQ_R_L
PCIE_PERST* 134 PCH_WLAN_PERST_L
BT_SF_CLK 114 BT_SPI2_CLK
BT_SF_CS* 113 BT_SPI2_CSN
BT_SF_MISO 115 BT_SPI2_MISO
BT_SF_MOSI 37 BT_SPI2_MOSI
BT_UART_CTS* 117 UART_BT_BUF_CTS_L
BT_UART_RTS* 40 UART_BT_BUF_RTS_L
BT_UART_RX 39 UART_BT_BUF_R2D
BT_UART_TX 119 UART_BT_BUF_D2R
BT_GPIO_2 36 PCH_BT_ROM_BOOT_L_R
BT_GPIO_3 112 BT_AUDIO_SYNC
BT_GPIO_4 38 BT_GPIO_4
BT_GPIO_5 116 BT_GPIO_5
BT_I2S_CLK 34 UART_BT_LH_D2R
BT_I2S_DI 35 NC_I2S_BT_R2D
BT_I2S_DO 32 NC_I2S_BT_D2R
BT_I2S_WS 33 UART_BT_LH_R2D
BT_DEV_WAKE 118 BT_DEV_WAKE
BT_HOST_WAKE 42 BT_HOST_WAKE
BT_REG_ON 111 BT_PWR_EN_R
DO NOT TOGGLE WHEN BT OVER PCIE ENABLED
WLAN_SROM_CLK 141
WLAN_SROM_CS_R 142
WLAN_SROM_DIN 68
WLAN_SROM_DOUT 69
UART_WLAN_R2D_RTS_L 46
UART_WLAN_D2R_CTS_L 43
UART_WLAN_R2D 44
UART_WLAN_D2R 45
WLAN_AUDIO_SYNC 121
WLAN_CONTEXT_A 57
WLAN_CONTEXT_B 59
TP_WLAN_JTAG_SEL 70
TP_WLAN_JTAG_TCK 132
WLAN_THROTTLE 133
TP_WLAN_JTAG_TRST_L 131
BT_INTERFACE_SEL 136
WLAN_SROM_STRAP 60
WLAN_SROM_SIZE 61
PMU_CLK32K_WLANBT 109
WLAN_HOST_WAKE 56
WLAN_PWR_EN 110
STRAP PINS
R3783 0 5% 1/20W MF 0201
BT_SPI2_MISO BT_SPI2_MISO_R
WIFI_DBG
R3784 0 5% 1/20W MF 0201
BT_SPI2_MOSI BT_SPI2_MOSI_R
R3781 0 5% 1/20W MF 0201
BT_SPI2_CLK BT_SPI2_CLK_R
R3782 0 5% 1/20W MF 0201
BT_SPI2_CSN BT_SPI2_CSN_R
R3711 1K 5% 1/20W MF 201
PCH_WLAN_CLKREQ_R_L PCH_WLAN_CLKREQ_L
R3715 100K 5% 1/20W MF 201
R3714 100K 5% 1/20W MF 201
PP1V8_S5
BT_SFLASH_STRAP
HIGH: SFLASH
LOW: NO SFLASH
R3704 10K 5% 1/20W MF 201
NOSTUFF
R3720 0 5% 1/20W MF 0201
PCH_BT_ROM_BOOT_L
NOSTUFF
R3716 0 5% 1/20W MF 0201
BT_PWR_EN
BOOT_STRAPS
R3702 1K 0.5% 1/20W MF 0201
WLAN_SROM_STRAP
WLAN_SROM_STRAP:
LOW: OTP
HIGH: SROM
NOSTUFF
R3713 10K 5% 1/20W MF 201
BT_INTERFACE_SEL
BT_INTERFACE_SEL
LOW: (DEFAULT): PCIE
HIGH: UART
TP_WLAN_JTAG_SEL
R3700 10K 5% 1/20W MF 201
WLAN_JTAG_SEL:
LOW: Some JTAG are GPIOs
HIGH: JTAG Enabled
WLAN_SROM_SIZE
R3705 1K 0.5% 1/20W MF 0201
WLAN_SROM_SIZE:
LOW: 16 KBIT
HIGH: 4 KBIT
PP1V8_G3S_WLANBT
PLACE_NEAR=U3710.8:2MM
C3711 0.1UF 10% 6.3V CERM-X5R
R3712 10K 5% MF 201
U3710
CAS93C86B
UDFN8
VCC
DI
CS
SK
PE
DO
ORG
OMIT_TABLE
GND EPAD
WLAN_SROM_DOUT
WLAN_SROM_CS
WLAN_SROM_CLK
WLAN_SROM_DIN
WLAN_SROM_ORG
WLAN_SROM_CS_R
R3718 1K 0.5% 1/20W MF 0201
R3717 10K 5% 1/20W MF 201
WLAN SERIAL EEPROM
BLUETOOTH SERIAL FLASH
PP1V8_G3S_WLANBT
R3751 100K 5% 1/20W MF 201
R3752 100K 5% 1/20W MF 201
R3753 10K 5% MF 201
R3754 1K 5% 1/20W MF
BT_SPI2_CLK
BT_SPI2_CSN
BT_SFLASH_CS_L
BT_SFLASH_WP_L
BT_SFLASH_HOLD_L
U3750
4MBIT-1.8V
MX25U4035FZUI
USON
OMIT_TABLE
VCC
SCLK
CS*
WP*/SIO2
HOLD*/SIO3
SI/SIO0
SO/SIO1
GND
BT_SPI2_MOSI
BT_SPI2_MISO
C3710 0.1UF 10% 6.3V CERM-X5R 0201
C3712 10UF 20% 6.3V CERM-X5R 0402-4
BT_GPIO_5 PP3715
BT_GPIO_4 PP3714
PCIE_PME_L PP3713
TP_WLAN_JTAG_TRST_L TP3712
WLAN_THROTTLE TP3711
(TP_WLAN_JTAG_TMS)
TP_WLAN_JTAG_TCK TP3710
TP_WLAN_JTAG_SEL TP3709
WLAN_CONTEXT_B TP3708
(TP_WLAN_JTAG_TDO)
WLAN_CONTEXT_A TP3707
(TP_WLAN_JTAG_TDI)
WLAN_SROM_CLK TP3706
WLAN_SROM_CS TP3705
WLAN_SROM_DIN TP3704
WLAN_SROM_DOUT TP3703
PCH_PCIE_CLK100M_WLAN_N TP3701
PLACE TP3701 AND TP3702 ON THE BOTTOM SIDE FOR PCIE PROBE ACCESS
PCH_PCIE_CLK100M_WLAN_P TP3702
PLACE C3706 AND C3707 ON THE BOTTOM SIDE FOR PCIE PROBE ACCESS
U3701.124:8MM
PCH_PCIE_WLAN_D2R_C_N C3706 0.1UF PCH_PCIE_WLAN_D2R_N
U3701.49:8MM
PCH_PCIE_WLAN_D2R_C_P C3707 0.1UF PCH_PCIE_WLAN_D2R_P
PLACE C3708 AND C3709 ON THE BOTTOM SIDE FOR PCIE PROBE ACCESS
U3701.126:8MM
PCH_PCIE_WLAN_R2D_N C3708 0.1UF PCH_PCIE_WLAN_R2D_C_N
U3701.51:8MM
PCH_PCIE_WLAN_R2D_P C3709 0.1UF PCH_PCIE_WLAN_R2D_C_P
BOM_COST_GROUP=WIRELESS
PAGE TITLE
WIFI/BT MODULE 1
Apple Inc.
DRAWING NUMBER 051-04273
SIZE D
REVISION 4.0.0
BRANCH evt-1
PAGE 37 OF 500
SHEET 32 OF 98
NOTICE OF PROPRIETARY PROPERTY:
THE INFORMATION CONTAINED HEREIN IS THE PROPRIETARY PROPERTY OF APPLE INC.
THE POSESSOR AGREES TO THE FOLLOWING:
I TO MAINTAIN THIS DOCUMENT IN CONFIDENCE
II NOT TO REPRODUCE OR COPY IT
III NOT TO REVEAL OR PUBLISH IT IN WHOLE OR PART
IV ALL RIGHTS RESERVED

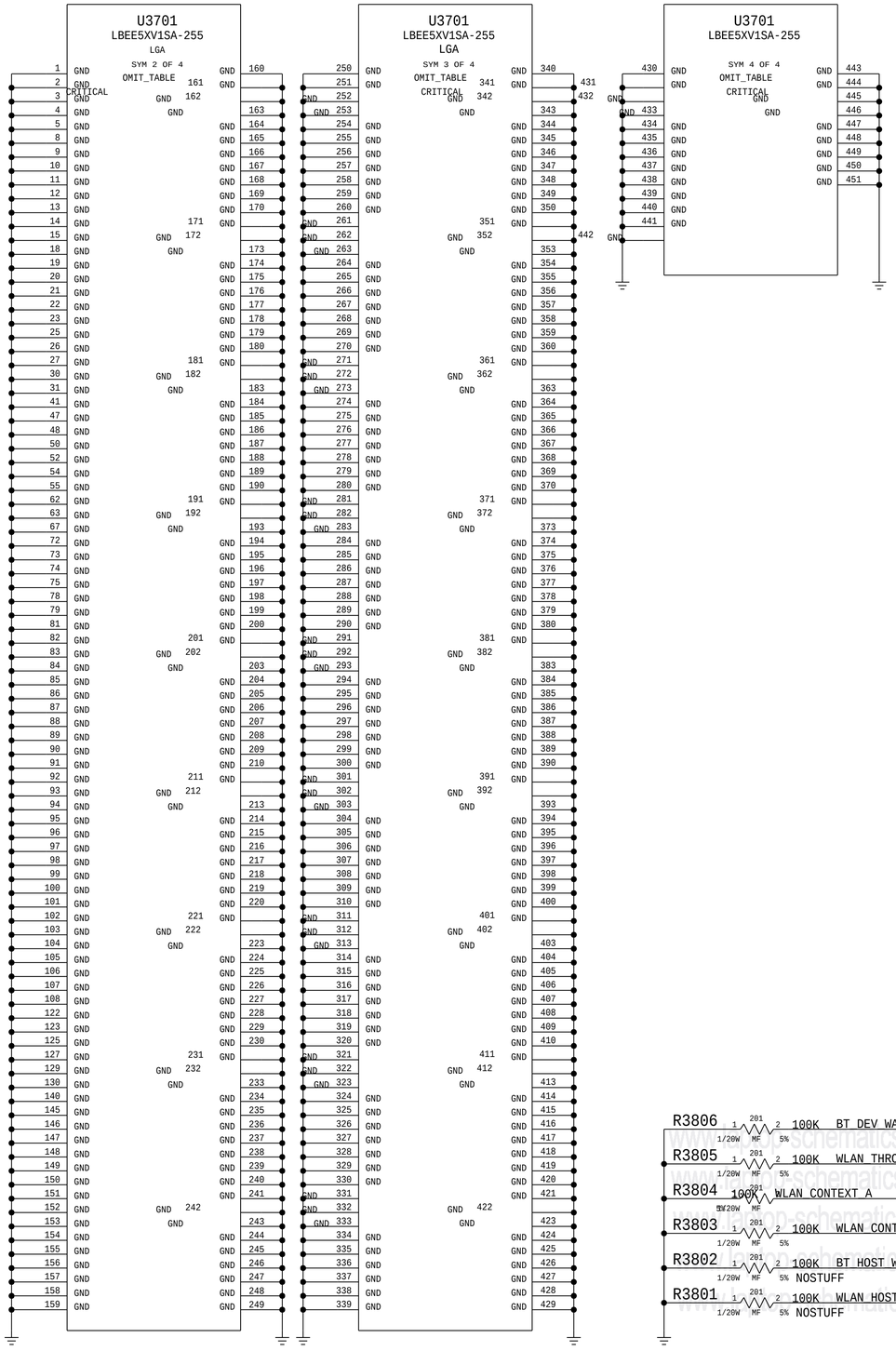

RF CONNECTORS

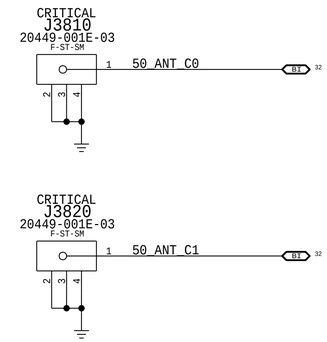

WIFI BT DEBUG CONNECTORS

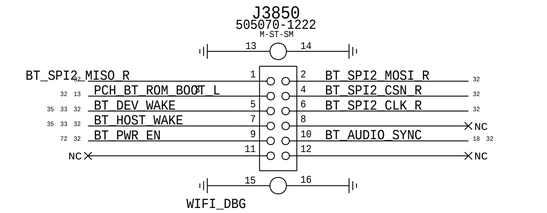

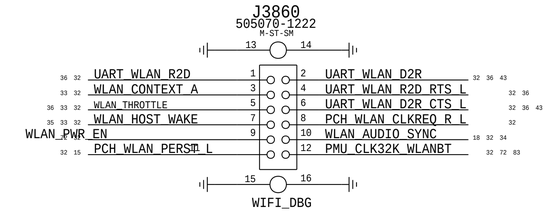

PLACE J3850 AND J3860 ON THE BOTTOM SIDE

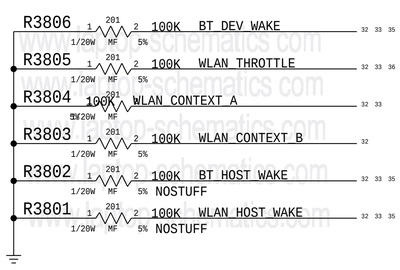

BOM_COST_GROUP=WIRELESS

PAGE TITLE
WIFI/BT MODULE 2

Apple Inc.

DRAWING NUMBER 051-04273 SIZE D
REVISION 4.0.0
BRANCH evt-1
PAGE 38 OF 500
SHEET 33 OF 98

NOTICE OF PROPRIETARY PROPERTY:
THE INFORMATION CONTAINED HEREIN IS THE PROPRIETARY PROPERTY OF APPLE INC.
THE POSESSOR AGREES TO THE FOLLOWING:
I TO MAINTAIN THIS DOCUMENT IN CONFIDENCE
II NOT TO REPRODUCE OR COPY IT
III NOT TO REVEAL OR PUBLISH IT IN WHOLE OR PART
IV ALL RIGHTS RESERVED

Note IPU/IPD represents SW configured state, not HW default

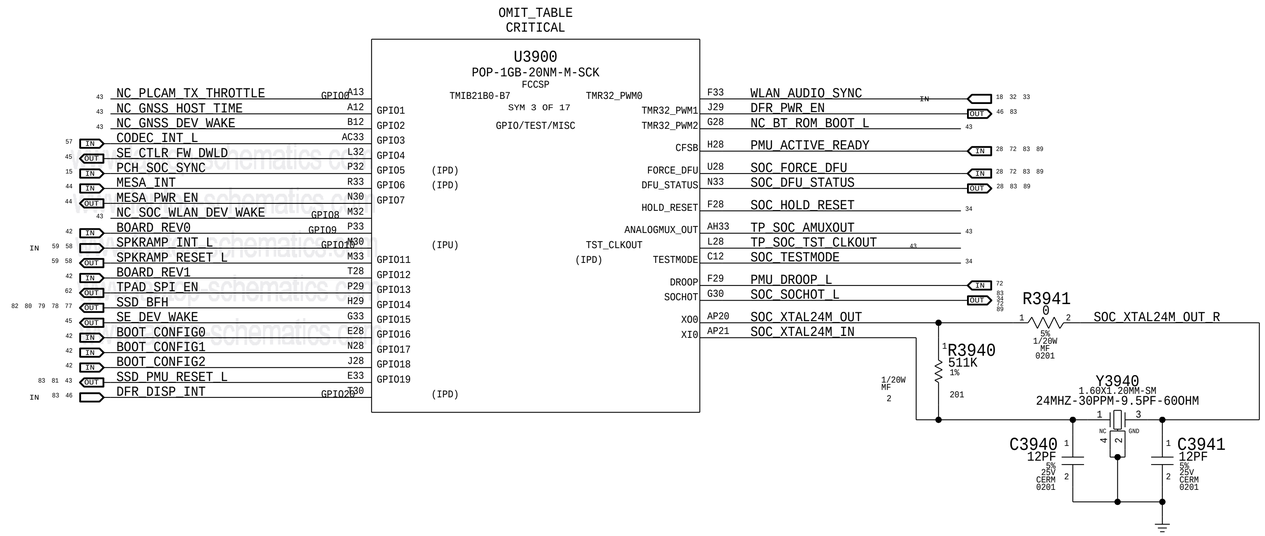

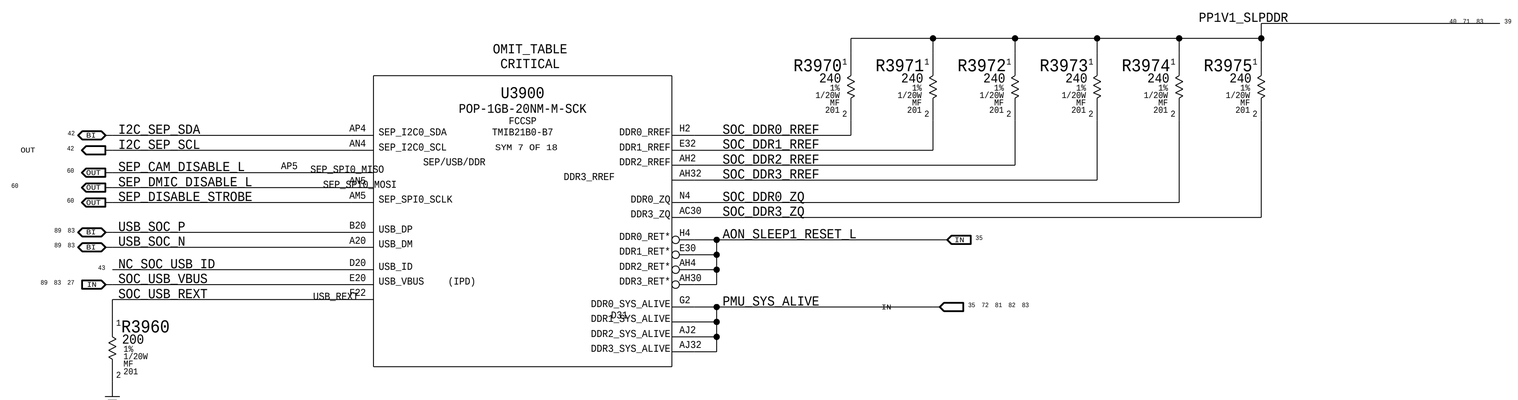

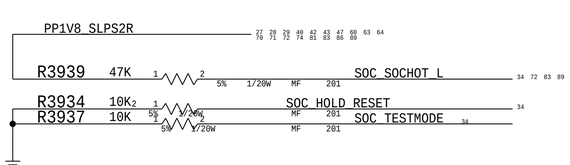

BOM_COST_GROUP=SOC

PAGE TITLE: SOC GPIO/SEP/USB/DDR/TEST

Apple Inc.

DRAWING NUMBER: 051-04273 SIZE: D

REVISION: 4.0.0

BRANCH: evt-1

PAGE: 39 OF 500

SHEET: 34 OF 98

NOTICE OF PROPRIETARY PROPERTY:
THE INFORMATION CONTAINED HEREIN IS THE PROPRIETARY PROPERTY OF APPLE INC.
THE POSESSOR AGREES TO THE FOLLOWING:
I TO MAINTAIN THIS DOCUMENT IN CONFIDENCE
II NOT TO REPRODUCE OR COPY IT
III NOT TO REVEAL OR PUBLISH IT IN WHOLE OR PART
IV ALL RIGHTS RESERVED

OMIT_TABLE
CRITICAL

U3900
POP-1GB-20NM-M-SCK
FCCSP
TMIB21B0-B7
SYM 6 OF 17

NC_WLAN_CONTEXT_A	B5	AOP_FUNC[0]		AOP_PDM_CLK0	N6	PDM_DMIC_CLK0_R
NC_WLAN_CONTEXT_B	D4	AOP_FUNC[1]		AOP_PDM_CLK1	J6	PDM_DMIC_CLK1_R
ACCEL_INT1	G1	AOP_FUNC[2]		AOP_PDM_CLK2	F5	TP_SMC_FIXTURE_MODE_L
ACCEL_INT2	C5	AOP_FUNC[3]		AOP_PDM_CLK3	F2	NC_PLCAM_PROX_INT_L
NC_BTUARTMUX_SEL_PCH	D1	AOP_FUNC[4]		AOP_PDM_CLK4	J4	NC_PLCAM_ROMEO_B2B_DETECT
SOC_PERST_L	E4	AOP_FUNC[5]				
NC_ALTIMETER_INT	C4	AOP_FUNC[6]	(IPD)	AOP_PDM_DATA0	F1	PDM_DMIC_DATA0
SPI_ACCEL_CS_L	F4	AOP_FUNC[7]	(IPD)	AOP_PDM_DATA1	J1	PDM_DMIC_DATA1
NC_SPI_ALTIMETER_CS_L	E1	AOP_FUNC[8]		AOP_SPI_MOSI	A5	SPI_AOP_SENSOR_MOSI_R
				AOP_SPI_SCLK	E5	SPI_AOP_SENSOR_CLK_R
NC_I2C_AOP_SCL	H6	AOP_I2C0_SCL		AOP_SPI_MISO	C2	SPI_AOP_SENSOR_MISO
NC_I2C_AOP_SDA	G6	AOP_I2C0_SDA				

OMIT_TABLE
CRITICAL

U3900
POP-1GB-20NM-M-SCK
FCCSP
TMIB21B0-B7
SYM 7 OF 17

DFR_TOUCH_INT_L	AG6	AON_GPIO00	(IPU)	JTAG_TCK	AF6	SWD_SOC_SWCLK
CPU_SMC_THRMTRIP_L	AB6	AON_GPIO01		JTAG_TMS	AH1	SWD_SOC_SWDIO
NC_SMC_GFX_SELF_THROTTLE	AL1	AON_GPIO02		JTAG_TDI	AE6	DEBUG_JTAG_SOC_TDI
NC_SMC_TOPBLK_SWP_L	AH5	AON_GPIO03		JTAG_TDO	AK1	DEBUG_JTAG_SOC_TDO
XDP_PRESENT_L	AG1	AON_GPIO04	(IPD)	JTAG_TRST*	AH6	TP_JTAG_SOC_TRST_L
CODEC_RESET_L	AL4	AON_GPIO05		JTAG_SEL	Y8	SOC_JTAG_SEL (DAP=0, TAP=1)
BT_DEV_WAKE	AK4	AON_GPIO06				
NC_PCIEDN_WAKE_L	AD6	AON_GPIO07		DOCK_CONNECT	AJ5	SOC_DOCK_CONNECT
NC_ENET_LOW_PWR	AM1	AON_GPIO08		AON_SWD0_TMS	AF2	NC_SOC_WLAN_JTAG_TMS
TPAD_SPI_INT_L	AJ6	AON_GPIO09		AON_SWD1_TMS	AE4	NC_MESA_MENUKEY_L
NC_SDCONN_STATE_CHANGE_L	AK5	AON_GPIO010		AON_SWD01_TCK	AE5	NC_SOC_WLAN_JTAG_TCK
NC_ENET_MEDIA_SENSE	AJ1	AON_GPIO011				
PMU_INT_L	AL6	AON_GPIO012	(IPU)	WDOG	AF5	SOC_WDOG
				AON_SLEEP1_RESET*	AC6	AON_SLEEP1_RESET_L
SPMI_CLK	AA6	AON_SPMI_SCLK				
SPMI_DATA	AK2	AON_SPMI_SDATA				
PMU_CLK32K_SOC	AK6	RT_CLK32768				
SOC_COLD_RESET_L	AG4	COLD_RESET*				
PMU_COLD_RESET_L	AF4	CFSB_AON				

PLACE_NEAR=U3900.AA6:5MM
SPMI_CLK — R4036 20 1 2 5% 1/20W MF 201
SPMI_DATA — R4037 20 1 2 5% 1/20W MF 201
PLACE_NEAR=U7800.M7:5MM
R4039 1 2 4.7K 5% 1/20W MF 201

COLD_RESET and CFSB_AON requires isolation per <rdar://30222445>

OMIT_TABLE
CRITICAL

U3900
POP-1GB-20NM-M-SCK
FCCSP
TMIB21B0-B7
SYM 9 OF 17
SMC

PLACE_NEAR=U3900.R4:5MM
PLACE_NEAR=U3900.R1:5MM
PLACE_NEAR=U3900.T5:5MM
PLACE_NEAR=U3900.T6:5MM

ESPI_IO<0> — R4050 20 1 2 5% 1/20W MF 201
ESPI_IO<1> — R4051 20 1 2 5% 1/20W MF 201
ESPI_IO<2> — R4052 20 1 2 5% 1/20W MF 201
ESPI_IO<3> — R4053 20 1 2 5% 1/20W MF 201

ESPI_IO R<0>	R4	SMC_ESPI_IO0		SMC_GPIO0	V4	CODEC_WAKE_L
ESPI_IO R<1>	R1	SMC_ESPI_IO1	(IPD)	SMC_GPIO1	V8	BT_HOST_WAKE
ESPI_IO R<2>	T5	SMC_ESPI_IO2	(IPD)	SMC_GPIO2	V6	WLAN_HOST_WAKE
ESPI_IO R<3>	T6	SMC_ESPI_IO3		SMC_GPIO3	T1	DP_INT_HPD_MASK
ESPI_CLK60M	P2	SMC_ESPI_CLK	(IPD)	SMC_GPIO4	V7	SMC_LID_RIGHT
ESPI_CS_L	T4	SMC_ESPI_CS*		SMC_GPIO5	U6	NC_PCC_EVENT
ESPI_RESET_L	T2	SMC_ESPI_RESET*	(IPD)	SMC_GPIO6	V1	NC_TPAD_VIBE_L
SMC_PECI_RX	M6	SMC_PECI_IN	(IPD)	SMC_GPIO7	W5	TPAD_KBD_WAKE_L
SMC_PECI_TX	R6	SMC_PECI_OUT		SMC_GPIO8	AC1	SMC_LID_LEFT
				SMC_GPIO9	AB2	NC_SPI_DESCRIPTOR_OVERRIDE_L
SMC_PCH_PWROK	U7	PCH_PWROK		SMC_GPIO10	AB1	NC_DISP_GCON_INT_L
SMC_PCH_SYS_PWROK	U8	SYS_PWROK		SMC_GPIO11	AA4	NC_PCH_GCON_INT_L
				SMC_GPIO12	W8	TPAD_ACTUATOR_DISABLE_L
SMC_RSMRST_L	U1	RSMRST*		SMC_GPIO13	TBTA_WAKE_L	
SMC_SYSRST_L	U5	SYS_RESET*		SMC_GPIO14	AC2	UPC_I2C_INT_L
PM_SLP_S0_L	W1	SLP_S0B		SMC_GPIO_15	K2	DP_INT_HPD_L
SMC_PROCHOT_L	P6	PROCHOT*				
PMU_SYS_ALIVE	W6	SYS_ALIVE		SMC_ADC0	AE1	SMC_CPU_HS_ISENSE
				SMC_ADC1	Y5	SMC_PBUS_VSENSE
I2C_UPC_SCL	K4	SMC_I2C0_SCL		SMC_ADC2	AE2	SMC_BMON_ISENSE
I2C_UPC_SDA	H1	SMC_I2C0_SDA		SMC_ADC3	AB5	SMC_DCIN_ISENSE
				SMC_ADC4	Y7	SMC_DCIN_VSENSE
I2C_SNS0_S0_SCL	L4	SMC_I2C1_SCL		SMC_ADC5	AD4	SMC_PP3V3_WLANBT_ISENSE
I2C_SNS0_S0_SDA	L5	SMC_I2C1_SDA		SMC_ADC6	AF1	SMC_PP1V8_WLANBT_ISENSE
				SMC_ADC7	SMC_CALPE_ISENSE	
I2C_THMSNS_SCL	M4	SMC_I2C2_SCL		REFP_ADC	AC5	PP1V25_SLPS2R_SMC_AVREF
I2C_THMSNS_SDA	K1	SMC_I2C2_SDA		REFM_ADC	AC4	GND_SMC_AVSS
I2C_DISP_SCL	L2	SMC_I2C3_SCL		SMC_PWM0	E2	SMC_FAN_0_PWM
I2C_DISP_SDA	P5	SMC_I2C3_SDA		SMC_TACH0	K6	SMC_FAN_0_TACH
I2C_PWR_SCL	L1	SMC_I2C4_SCL		SMC_PWM1	N5	NC_SMC_FAN_1_PWM
I2C_PWR_SDA	M1	SMC_I2C4_SDA		SMC_TACH1	L6	NC_SMC_FAN_1_TACH
I2C_SENSE_SCL	N1	SMC_I2C5_SCL		SMC_PWM2	K5	NC_SMC_LED_ONEWIRE
I2C_SENSE_SDA	N2	SMC_I2C5_SDA				
I2C_SSD_SCL	P1	SMC_I2C6_SCL	(IPU)	SMC_UART0_RXD	SMC_DEBUGPRT_RX	
I2C_SSD_SDA	P4	SMC_I2C6_SDA		SMC_UART0_TXD	T1	SMC_DEBUGPRT_TX
				SWD_OUT0_TCK	AB4	SSD0_SWCLK
				SWD_OUT0_TMS	Y1	SSD0_SWDIO
				SWD_OUT1_TCK	AD1	NC_SSD1_SWCLK_UART_R2D
				SWD_OUT1_TMS	W7	NC_SSD1_SWDIO_UART_D2R

PLACE_NEAR=U3900.AC4:4MM
XW4089
SM

R4046 10K 1 2 SOC_JTAG_SEL
R4047 100K 1 2 5% 1/20W MF 201 SOC_DOCK_CONNECT

BOM_COST_GROUP=SOC

PAGE TITLE	SOC AOP/AON/SMC
Apple Inc.	DRAWING NUMBER 051-04273
	SIZE D
	REVISION 4.0.0
	BRANCH evt-1
	PAGE 40 OF 500
	SHEET 35 OF 98

NOTICE OF PROPRIETARY PROPERTY:
THE INFORMATION CONTAINED HEREIN IS THE PROPRIETARY PROPERTY OF APPLE INC.
THE POSESSOR AGREES TO THE FOLLOWING:
I TO MAINTAIN THIS DOCUMENT IN CONFIDENCE
II NOT TO REPRODUCE OR COPY IT
III NOT TO REVEAL OR PUBLISH IT IN WHOLE OR PART
IV ALL RIGHTS RESERVED

OMIT_TABLE
CRITICAL

U3900
POP-1GB-20NM-M-SCK
FCCSP
TMIB21B0-B7
SYM 4 OF 17
ISP

Net	Pin	Function
MIPI FTCAM DATA P<0>	B24	MIPI0C_DATA0_P
MIPI FTCAM DATA N<0>	A24	MIPI0C_DATA0_N
	B22	MIPI0C_DATA1_P
	A22	MIPI0C_DATA1_N
MIPI FTCAM CLK P	B23	MIPI0C_CLK_P
MIPI FTCAM CLK N	A23	MIPI0C_CLK_N
	B25	MIPI1C_DATA0_P
	A25	MIPI1C_DATA0_N
	B27	MIPI1C_DATA1_P
	A27	MIPI1C_DATA1_N
	B26	MIPI1C_CLK_P
	A26	MIPI1C_CLK_N
MIPI DFR DATA P	B30	MIPID_DATA0_P
MIPI DFR DATA N	A30	MIPID_DATA0_N
MIPI DFR CLK P	B29	MIPID_CLK_P
MIPI DFR CLK N	A29	MIPID_CLK_N
SOC MIPI0C REXT	F23	MIPI0C_REXT
SOC MIPI1C REXT	F25	MIPI1C_REXT
SOC MIPID REXT	F26	MIPID_REXT
I2C FTCAM SDA	AF32	ISP_I2C0_SDA
I2C FTCAM SCL	AD33	ISP_I2C0_SCL
NC I2C PLCAM SDA	AA29	ISP_I2C1_SDA
NC I2C PLCAM SCL	AD30	ISP_I2C1_SCL
NC FTCAM CLK12M R	AF32	SENSOR0_CLK
NC FTCAM RESET L	AF30	SENSOR0_RST
DFR TOUCH RESET L	AC29	SENSOR0_ISTRB
NC PLCAM RX CLK12M R	AA28	SENSOR1_CLK
NC PLCAM RX RESET L	AB30	SENSOR1_RST
DFR DISP RESET L	AF30	SENSOR1_ISTRB
NC PLCAM TX CLK12M R	AB28	SENSOR2_CLK
NC PLCAM TX RESET L	AD28	SENSOR2_RST
NC PLCAM TX INT	W28	SENSOR_INT
DFR DISP TE	D33	DISP_TE (IPD)
BOARD REV2	L30	DISP_VSYNC
DFR TOUCH CLK32K RESET L	AF29	CLK32K_OUT

R4100 4.02K 1% 1/20W MF 201 — PLACE_NEAR=U3900.F23:5MM
R4101 4.02K 1% 1/20W MF 201
R4102 4.02K 1% 1/20W MF 201 — PLACE_NEAR=U3900.F26:5MM
PLACE_NEAR=U3900.F25:5MM

OMIT_TABLE
CRITICAL

U3900
POP-1GB-20NM-M-SCK
FCCSP
TMIB21B0-B7
SYM 2 OF 17
I2C/UART/SPI/I2S

Net	Pin	Function
I2C SPKRAMP L SDA	W33	I2C0_SDA
I2C SPKRAMP L SCL	U30	I2C0_SCL
I2C SPKRAMP R SDA	AB32	I2C1_SDA
I2C SPKRAMP R SCL	V30	I2C1_SCL
I2C CODEC SDA	H30	I2C2_SDA
I2C CODEC SCL	P28	I2C2_SCL
I2C ALS SDA	V28	I2C3_SDA
I2C ALS SCL	AB33	I2C3_SCL
I2C DFR SDA	L33	I2C4_SDA
I2C DFR SCL	R29	I2C4_SCL
NC I2C SOC 5 SDA	M29	I2C5_SDA
NC I2C SOC 5 SCL	R30	I2C5_SCL
SPKR ID1	J33	I2C6_SDA (IPU)
SPKR ID0	L29	I2C6_SCL (IPU)
SOC DEBUGPRT RX	V32	UART0_RXD (IPU)
SOC DEBUGPRT TX	U32	UART0_TXD
UART SE D2R	B15	UART1_RXD
UART SE R2D	A15	UART1_TXD
UART SE D2R CTS L	D13	UART1_CTS*
UART SE R2D RTS L	E12	UART1_RTS*
NC UART BT D2R	F32	UART2_RXD
NC UART BT R2D	F30	UART2_TXD
NC UART BT D2R CTS L	M28	UART2_CTS*
NC UART BT R2D RTS L	K28	UART2_RTS*
UART BT LH D2R	H32	UART3_RXD
UART BT LH R2D	J32	UART3_TXD
NC UART GNSS D2R CTS L	H33	UART3_CTS*
NC UART GNSS R2D RTS L	P30	UART3_RTS*
UART WLAN D2R	B14	UART4_RXD
UART WLAN R2D	A14	UART4_TXD
UART WLAN D2R CTS L	C13	UART4_CTS*
UART WLAN R2D RTS L	D12	UART4_RTS*
SPI SOCROM MISO	AM4	SPI0_MISO
SPI SOCROM MOSI R	AN3	SPI0_MOSI
SPI SOCROM CLK R	AP6	SPI0_SCLK
SPI SOCROM CS L		SPI0_SSIN
SPI TPAD MISO	K30	SPI1_MISO (IPU)
SPI TPAD MOSI R	J30	SPI1_MOSI
SPI TPAD CLK R	K33	SPI1_SCLK
SPI TPAD CS L	R28	SPI1_SSIN
SPI MESA MISO	B17	SPI2_MISO
SPI MESA MOSI R	D16	SPI2_MOSI
SPI MESA CLK R	A17	SPI2_SCLK
WLAN THROTTLE		SPI2_SSIN
SPI DFR MISO	C14	SPI3_MISO
SPI DFR MOSI R	D15	SPI3_MOSI
SPI DFR CLK R	C16	SPI3_SCLK
SPI DFR CS L	A16	SPI3_SSIN
I2S SPKRAMP L D2R	Y28	I2S0_DIN (IPD)
I2S SPKRAMP L R2D R	AC32	I2S0_DOUT
I2S SPKRAMP L BCLK R	AE32	I2S0_BCLK
I2S SPKRAMP L LRCLK	AE31	I2S0_LRCK
NC DFR TOUCH RSVD	AM33	I2S0_MCK
I2S SPKRAMP R D2R	C18	I2S1_DIN
I2S SPKRAMP R R2D R	E17	I2S1_DOUT
I2S SPKRAMP R BCLK R	D17	I2S1_BCLK
I2S SPKRAMP R LRCLK	B18	I2S1_LRCK
NC PCHROM SW EN	D18	I2S1_MCK
I2S CODEC D2R	Y33	I2S2_DIN (IPD)
I2S CODEC R2D R	AA33	I2S2_DOUT
I2S CODEC BCLK R	AC33	I2S2_BCLK
I2S CODEC LRCLK	V29	I2S2_LRCK
NC I2S CODEC MCLK	AL30	I2S2_MCK
NC I2S HAWKING D2R	R32	I2S3_DIN
NC I2S CODEC1 R2D R	U33	I2S3_DOUT
NC I2S HAWKING BCLK R	T33	I2S3_BCLK
NC I2S HAWKING LRCLK	U29	I2S3_LRCK
NC I2S CODEC1 MCLK	V33	I2S3_MCK

R4171 20 — PLACE_NEAR=U3900.AM4:5MM — SPI SOCROM MOSI
R4172 20 — PLACE_NEAR=U3900.AN3:5MM — SPI SOCROM CLK

BOM_COST_GROUP=SOC

PAGE TITLE	SOC ISP/I2C/UART/SPI/I2S
Apple Inc.	DRAWING NUMBER 051-04273 — SIZE D
	REVISION 4.0.0
	BRANCH evt-1
	PAGE 41 OF 500
	SHEET 36 OF 98

NOTICE OF PROPRIETARY PROPERTY:
THE INFORMATION CONTAINED HEREIN IS THE PROPRIETARY PROPERTY OF APPLE INC.
THE POSESSOR AGREES TO THE FOLLOWING:
I TO MAINTAIN THIS DOCUMENT IN CONFIDENCE
II NOT TO REPRODUCE OR COPY IT
III NOT TO REVEAL OR PUBLISH IT IN WHOLE OR PART
IV ALL RIGHTS RESERVED

OMIT_TABLE
CRITICAL

U3900
POP-1GB-20NM-M-SCK
FCCSP
TMIB21B0-B7
SYM 1 OF 17
PCIE UP/DN

PCIE SOC D2R P<0>	C4210 0.22UF	PCIE SOC D2R C P<0>	B10	PCIE_UP_TX0_P	PCIE_DN_TX0_P	AP28	NC PCIE WLAN R2D C P						
PCIE SOC D2R N<0>	C4211 0.22UF	PCIE SOC D2R C N<0>	C10	PCIE_UP_TX0_N	PCIE_DN_TX0_N	AL28	NC PCIE WLAN R2D C N						
		PCIE SOC D2R P<0>	E10	PCIE_UP_RX0_P	PCIE_DN_RX0_P	AK28	NC PCIE WLAN D2R P						
		PCIE SOC D2R N<0>	F10	PCIE_UP_RX0_N	PCIE_DN_RX0_N	AK28	NC PCIE WLAN D2R N						
PCIE SOC D2R P<1>	C4212 0.22UF	PCIE SOC D2R C P<1>	A9	PCIE_UP_TX1_P	PCIE_DN_TX1_P	AP27	NC PCIE ENET R2D C P						
PCIE SOC D2R N<1>	C4213 0.22UF	PCIE SOC D2R C N<1>	B9	PCIE_UP_TX1_N	PCIE_DN_TX1_N	AM27	NC PCIE ENET R2D C N						
		PCIE SOC D2R P<1>	D9	PCIE_UP_RX1_P	PCIE_DN_RX1_P	AK27	NC PCIE ENET D2R P						
		PCIE SOC D2R N<1>	E9	PCIE_UP_RX1_N	PCIE_DN_RX1_N	AJ27	NC PCIE ENET D2R N						
PCIE SOC D2R P<2>	C4214 0.22UF	PCIE SOC D2R C P<2>	B8	PCIE_UP_TX2_P	PCIE_DN_TX2_P	AP26	NC PCIE DN2 R2D C P						
PCIE SOC D2R N<2>	C4215 0.22UF	PCIE SOC D2R C N<2>	C8	PCIE_UP_TX2_N	PCIE_DN_TX2_N	AN26	NC PCIE DN2 R2D C N						
		PCIE SOC D2R P<2>	E8	PCIE_UP_RX2_P	PCIE_DN_RX2_P	AK26	NC PCIE DN2 D2R P						
		PCIE SOC D2R N<2>	F8	PCIE_UP_RX2_N	PCIE_DN_RX2_N	AK26	NC PCIE DN2 D2R N						
PCIE SOC D2R P<3>	C4216 0.22UF	PCIE SOC D2R C P<3>	A7	PCIE_UP_TX3_P	PCIE_DN_TX3_P	AN25	NC PCIE DN3 R2D C P						
PCIE SOC D2R N<3>	C4217 0.22UF	PCIE SOC D2R C N<3>	B7	PCIE_UP_TX3_N	PCIE_DN_TX3_N	AM25	NC PCIE DN3 R2D C N						
		PCIE SOC D2R P<3>	D7	PCIE_UP_RX3_P	PCIE_DN_RX3_P	AK25	NC PCIE DN3 D2R P						
		PCIE SOC D2R N<3>	E7	PCIE_UP_RX3_N	PCIE_DN_RX3_N	AJ25	NC PCIE DN3 D2R N						
SOC CLKREQ L	R4218 1K	SOC CLKREQ R L	A18	PCIE_UP_CLKREQ*	PCIE_DN_REFCLK0_P	AK23	NC PCIE CLK100M WLAN P						
					PCIE_DN_REFCLK0_N	AL23	NC PCIE CLK100M WLAN N						
		PCIE CLK100M SOC P	G12	PCIE_UP_EXT_REFCLK_P	PCIE_DN_CLKREQ0*	AG29	NC WLAN CLKREQ L						
		PCIE CLK100M SOC N	G14	PCIE_UP_EXT_REFCLK_N	PCIE_DN_PERST0*	AG31	NC WLAN PERST L						
		SOC PCIE UP REXT	G10	PCIE_UP_REXT	PCIE_DN_REFCLK1_P	AJ22	NC PCIE CLK100M ENET P						
					PCIE_DN_REFCLK1_N	AK22	NC PCIE CLK100M ENET N						
					PCIE_DN_CLKREQ1*	AG30	ENET CLKREQ L						
					PCIE_DN_PERST1*	AG33	NC ENET RESET L						
					PCIE_DN_REFCLK2_P	AN23	NC PCIE CLK100M DN2 P						
					PCIE_DN_REFCLK2_N	AP23	NC PCIE CLK100M DN2 N						
					PCIE_DN_CLKREQ2*	AD29	NC PCIEDN2 CLKREQ L						
					PCIE_DN_PERST2*	AH29	NC PCIEDN2 RESET L						
					PCIE_DN_REFCLK3_P	AP22	NC PCIE CLK100M DN3 P						
					PCIE_DN_REFCLK3_N	AN22	NC PCIE CLK100M DN3 N						
					PCIE_DN_CLKREQ3*	AF33	NC PCIEDN3 CLKREQ L						
					PCIE_DN_PERST3*	AE30	NC PCIEDN3 RESET L						
					PCIE_DN_EXT_REFCLK_P	AH25							
					PCIE_DN_EXT_REFCLK_N	AH24							
					PCIE_DN_REXT	AH23	SOC PCIE DN REXT						

PLACE_NEAR=U3900.G10:5MM
R4200 3.01K 1% 1/20W MF 201

PLACE_NEAR=U3900.AH23:5MM
R4201 3.01K 1% 1/20W MF 201

(UID_MODE strap on A00)

OMIT_TABLE
CRITICAL

U3900
POP-1GB-20NM-M-SCK
FCCSP
SYM 8 OF 17
PCIE STG 0/1

PCIE SSD0 R2D C P<0>	AN8	PCIE_STG0_TX0_P TMIB21B0-B7	PCIE_STG1_TX0_P	AP13	NC PCIE SSD1 R2D C P<0>		
PCIE SSD0 R2D C N<0>	AM8	PCIE_STG0_TX0_N	PCIE_STG1_TX0_N	AM13	NC PCIE SSD1 R2D C N<0>		
PCIE SSD0 D2R P<0>	AK8	PCIE_STG0_RX0_P	PCIE_STG1_RX0_P	AK13	NC PCIE SSD1 D2R P<0>		
PCIE SSD0 D2R N<0>	AJ8	PCIE_STG0_RX0_N	PCIE_STG1_RX0_N	AJ13	NC PCIE SSD1 D2R N<0>		
PCIE SSD0 R2D C P<1>	AP9	PCIE_STG0_TX1_P	PCIE_STG1_TX1_P	AP14	NC PCIE SSD1 R2D C P<1>		
PCIE SSD0 R2D C N<1>	AN9	PCIE_STG0_TX1_N	PCIE_STG1_TX1_N	AN14	NC PCIE SSD1 R2D C N<1>		
PCIE SSD0 D2R P<1>	AL9	PCIE_STG0_RX1_P	PCIE_STG1_RX1_P	AL14	NC PCIE SSD1 D2R P<1>		
PCIE SSD0 D2R N<1>	AK9	PCIE_STG0_RX1_N	PCIE_STG1_RX1_N	AK14	NC PCIE SSD1 D2R N<1>		
PCIE SSD0 R2D C P<2>	AN10	PCIE_STG0_TX2_P	PCIE_STG1_TX2_P	AP15	NC PCIE SSD1 R2D C P<2>		
PCIE SSD0 R2D C N<2>	AM10	PCIE_STG0_TX2_N	PCIE_STG1_TX2_N	AM15	NC PCIE SSD1 R2D C N<2>		
PCIE SSD0 D2R P<2>	AK10	PCIE_STG0_RX2_P	PCIE_STG1_RX2_P	AK15	NC PCIE SSD1 D2R P<2>		
PCIE SSD0 D2R N<2>	AJ10	PCIE_STG0_RX2_N	PCIE_STG1_RX2_N	AJ15	NC PCIE SSD1 D2R N<2>		
PCIE SSD0 R2D C P<3>	AP11	PCIE_STG0_TX3_P	PCIE_STG1_TX3_P	AP16	NC PCIE SSD1 R2D C P<3>		
PCIE SSD0 R2D C N<3>	AN11	PCIE_STG0_TX3_N	PCIE_STG1_TX3_N	AN16	NC PCIE SSD1 R2D C N<3>		
PCIE SSD0 D2R P<3>	AL11	PCIE_STG0_RX3_P	PCIE_STG1_RX3_P	AL16	NC PCIE SSD1 D2R P<3>		
PCIE SSD0 D2R N<3>	AK11	PCIE_STG0_RX3_N	PCIE_STG1_RX3_N	AK16	NC PCIE SSD1 D2R N<3>		
PCIE CLK100M SSD0 01 P	AK18	PCIE_STG0_REFCLK01_P	PCIE_STG1_REFCLK01_P	AP18	NC PCIE CLK100M SSD1 01 P		
PCIE CLK100M SSD0 01 N	AL18	PCIE_STG0_REFCLK01_N	PCIE_STG1_REFCLK01_N	AP18	NC PCIE CLK100M SSD1 01 N		
SSD0 CLKREQ0 L	AM30	PCIE_STG0_CLKREQ0*	PCIE_STG1_CLKREQ0*	C15	NC SSD1 CLKREQ0 L		
SSD0 CLKREQ1 L	AK30	PCIE_STG0_CLKREQ1*	PCIE_STG1_CLKREQ1*	E15	NC SSD1 CLKREQ1 L		
PCIE CLK100M SSD0 23 P	AJ19	PCIE_STG0_REFCLK23_P	PCIE_STG1_REFCLK23_P	AM19	NC PCIE CLK100M SSD1 23 P		
PCIE CLK100M SSD0 23 N	AK19	PCIE_STG0_REFCLK23_N	PCIE_STG1_REFCLK23_N	AN19	NC PCIE CLK100M SSD1 23 N		
SSD0 CLKREQ2 L	AL33	PCIE_STG0_CLKREQ2*	PCIE_STG1_CLKREQ2*	E14	NC SSD1 CLKREQ2 L		
SSD0 CLKREQ3 L	AK33	PCIE_STG0_CLKREQ3*	PCIE_STG1_CLKREQ3*	D14	NC SSD1 CLKREQ3 L		
SSD0 PCIE RESET L	AM32	PCIE_STG0_PERST*	PCIE_STG1_PERST*	AM31	NC SSD1 PCIE RESET L		
SSD0 CLK24M R	AM6	PCIE_STG0_NANDCLK	PCIE_STG1_NANDCLK	AM6	NC SSD1 CLK24M R		
	AH12	PCIE_STG0_EXT_REFCLK_P	PCIE_STG1_EXT_REFCLK_P	AH17			
	AH13	PCIE_STG0_EXT_REFCLK_N	PCIE_STG1_EXT_REFCLK_N	AH18			
SOC PCIE STG0 REXT	AH14	PCIE_STG0_REXT	PCIE_STG1_REXT	AH19	SOC PCIE STG1 REXT		

PLACE_NEAR=U3900.AH14:5MM
R4250 3.01K 1% 1/20W MF 201

PLACE_NEAR=U3900.AH19:5MM
R4251 3.01K 1% 1/20W MF 201

PP1V8_AWAKE
R4232 47K 5% 1/20W MF 201 ENET_CLKREQ_L

BOM_COST_GROUP=SOC

PAGE TITLE
SOC PCIE

Apple Inc.

DRAWING NUMBER 051-04273
SIZE D
REVISION 4.0.0
BRANCH evt-1
PAGE 42 OF 500
SHEET 37 OF 98

NOTICE OF PROPRIETARY PROPERTY:
THE INFORMATION CONTAINED HEREIN IS THE PROPRIETARY PROPERTY OF APPLE INC.
THE POSESSOR AGREES TO THE FOLLOWING:
I TO MAINTAIN THIS DOCUMENT IN CONFIDENCE
II NOT TO REPRODUCE OR COPY IT
III NOT TO REVEAL OR PUBLISH IT IN WHOLE OR PART
IV ALL RIGHTS RESERVED

Current estimates @ 105C & 2GB from Gibraltar Power Specification Rev 0.5.3

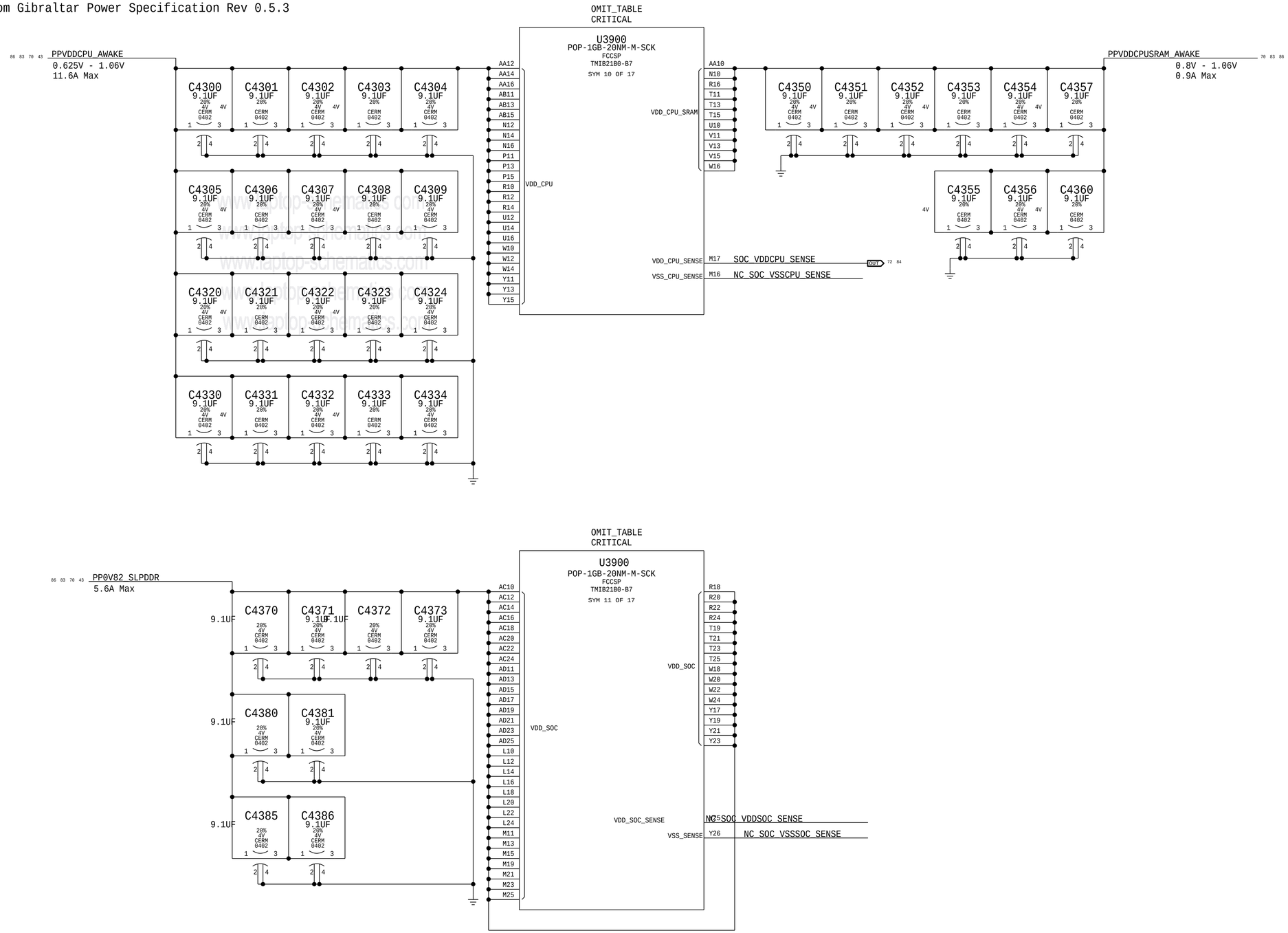

BOM_COST_GROUP=SOC

PAGE TITLE	SOC POWER 1
	Apple Inc.
DRAWING NUMBER	051-04273
SIZE	D
REVISION	4.0.0
BRANCH	evt-1
PAGE	43 OF 500
SHEET	38 OF 98

NOTICE OF PROPRIETARY PROPERTY:
THE INFORMATION CONTAINED HEREIN IS THE PROPRIETARY PROPERTY OF APPLE INC.
THE POSESSOR AGREES TO THE FOLLOWING:
I TO MAINTAIN THIS DOCUMENT IN CONFIDENCE
II NOT TO REPRODUCE OR COPY IT
III NOT TO REVEAL OR PUBLISH IT IN WHOLE OR PART
IV ALL RIGHTS RESERVED

Current estimates @ 105C & 2GB from Gibraltar Power Specification Rev 0.5.3

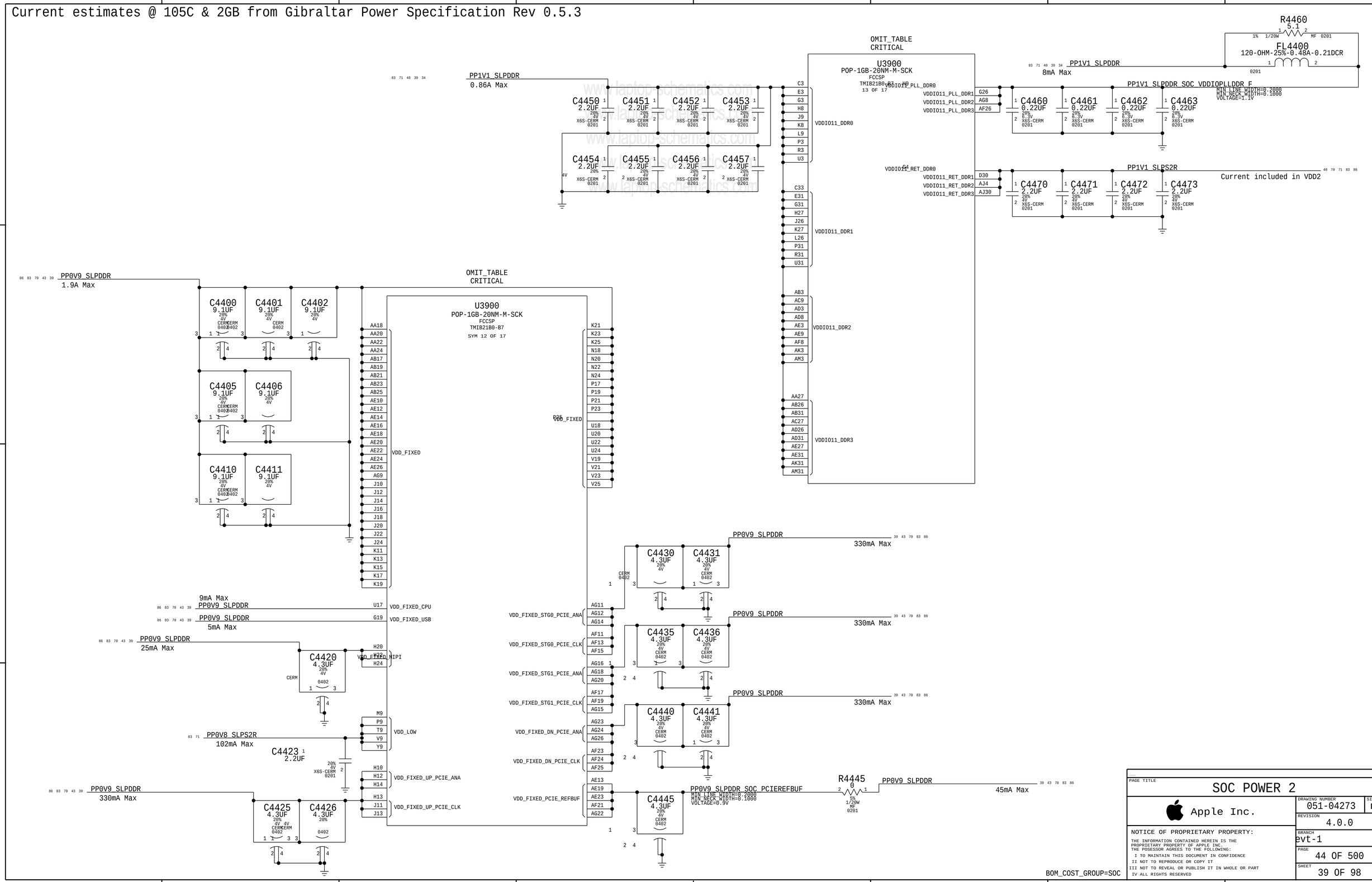

PAGE TITLE
SOC POWER 2

Apple Inc.

DRAWING NUMBER 051-04273
SIZE D
REVISION 4.0.0
BRANCH evt-1
PAGE 44 OF 500
SHEET 39 OF 98

NOTICE OF PROPRIETARY PROPERTY:
THE INFORMATION CONTAINED HEREIN IS THE PROPRIETARY PROPERTY OF APPLE INC.
THE POSESSOR AGREES TO THE FOLLOWING:
I TO MAINTAIN THIS DOCUMENT IN CONFIDENCE
II NOT TO REPRODUCE OR COPY IT
III NOT TO REVEAL OR PUBLISH IT IN WHOLE OR PART
IV ALL RIGHTS RESERVED

Current estimates @ 105C & 2GB from Gibraltar Power Specification Rev 0.5.3

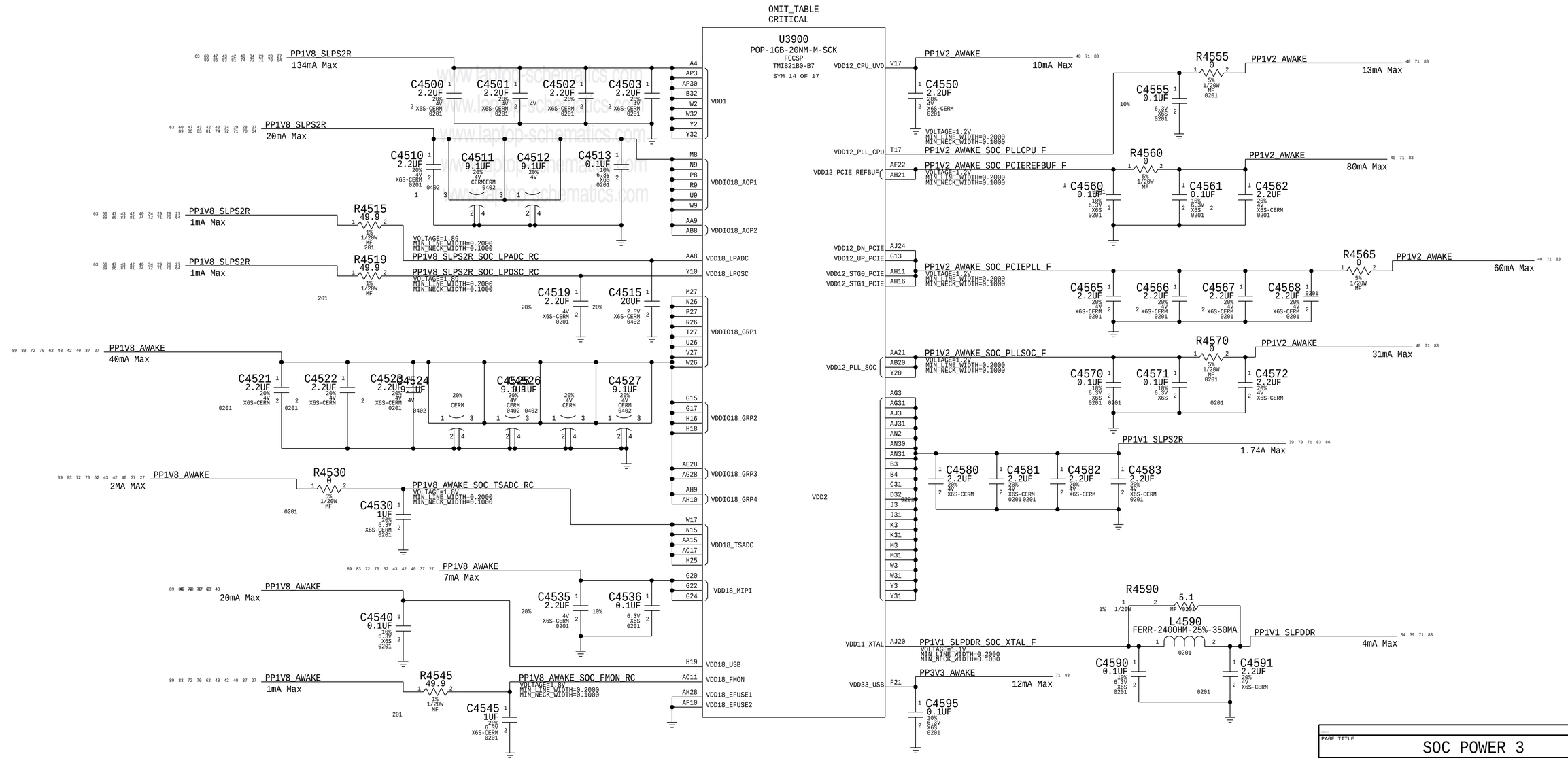

PAGE TITLE
SOC POWER 3

Apple Inc.

DRAWING NUMBER 051-04273
SIZE D
REVISION 4.0.0
BRANCH evt-1
PAGE 45 OF 500
SHEET 40 OF 98

NOTICE OF PROPRIETARY PROPERTY:
THE INFORMATION CONTAINED HEREIN IS THE PROPRIETARY PROPERTY OF APPLE INC.
THE POSESSOR AGREES TO THE FOLLOWING:
I TO MAINTAIN THIS DOCUMENT IN CONFIDENCE
II NOT TO REPRODUCE OR COPY IT
III NOT TO REVEAL OR PUBLISH IT IN WHOLE OR PART
IV ALL RIGHTS RESERVED

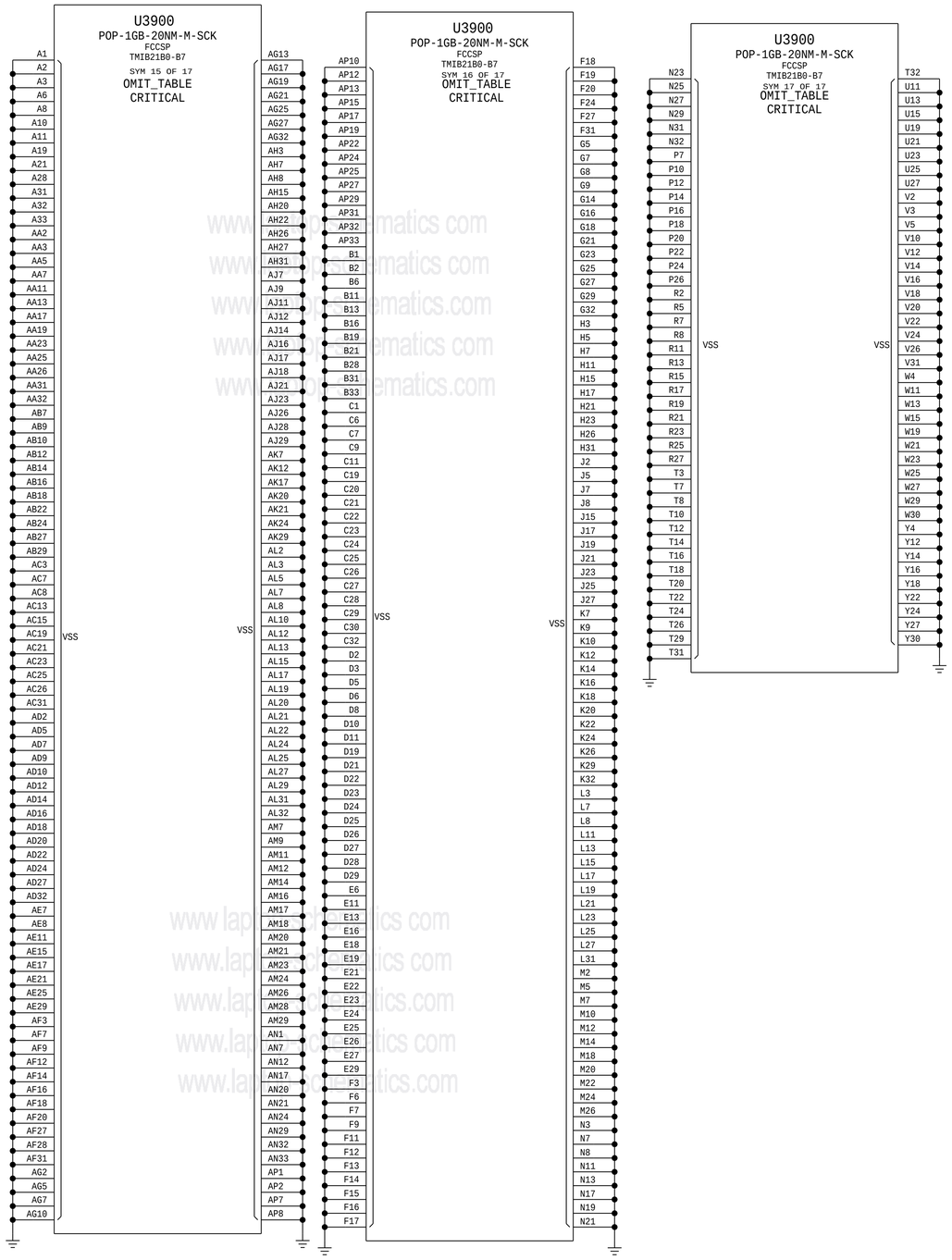

www.laptopschematics.com

BOM_COST_GROUP=SOC

PAGE TITLE
SOC GROUND

Apple Inc.

DRAWING NUMBER 051-04273 | SIZE D
REVISION 4.0.0
BRANCH evt-1
PAGE 46 OF 500
SHEET 41 OF 98

NOTICE OF PROPRIETARY PROPERTY:
THE INFORMATION CONTAINED HEREIN IS THE PROPRIETARY PROPERTY OF APPLE INC.
THE POSESSOR AGREES TO THE FOLLOWING:
I TO MAINTAIN THIS DOCUMENT IN CONFIDENCE
II NOT TO REPRODUCE OR COPY IT
III NOT TO REVEAL OR PUBLISH IT IN WHOLE OR PART
IV ALL RIGHTS RESERVED

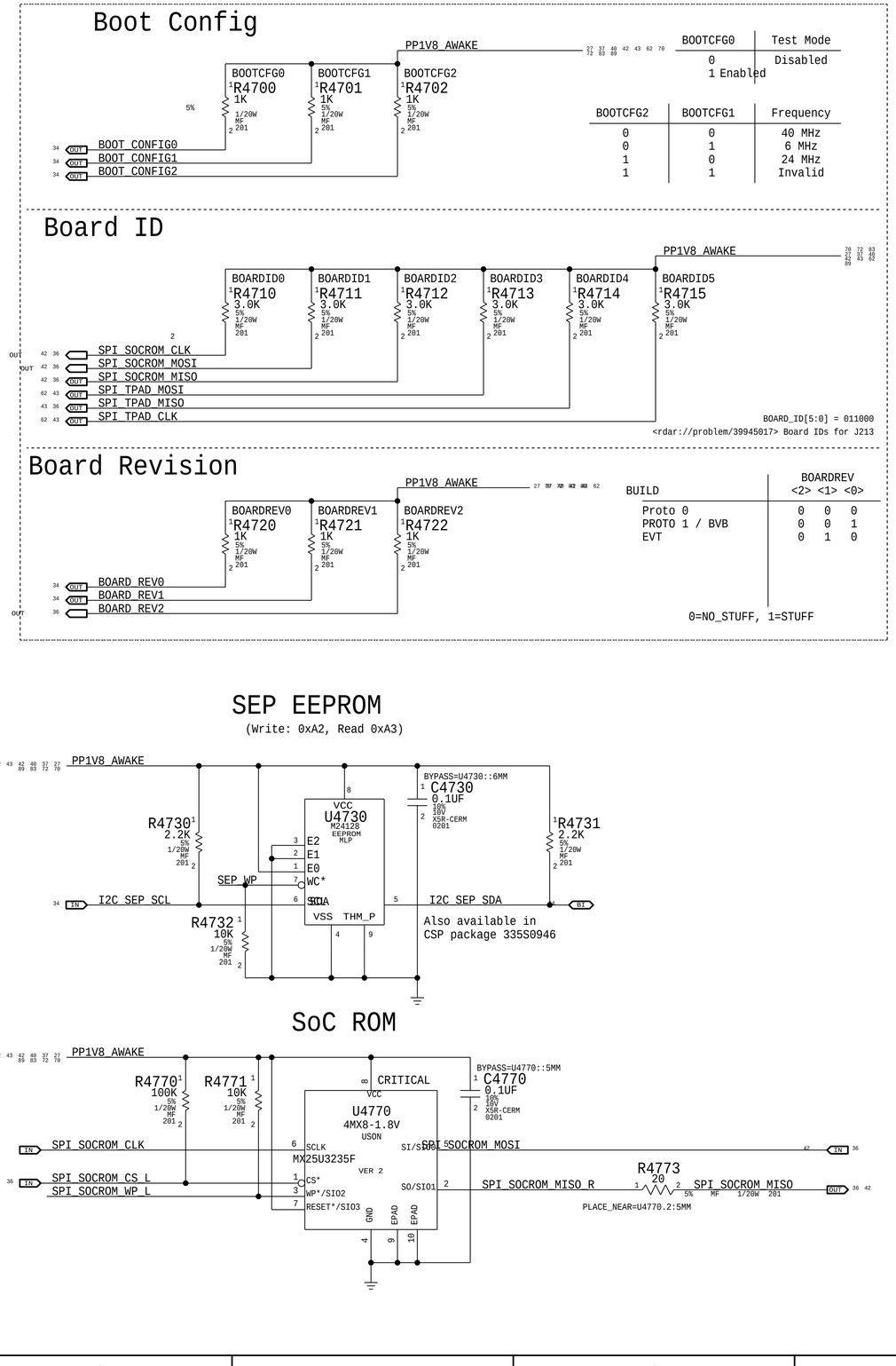

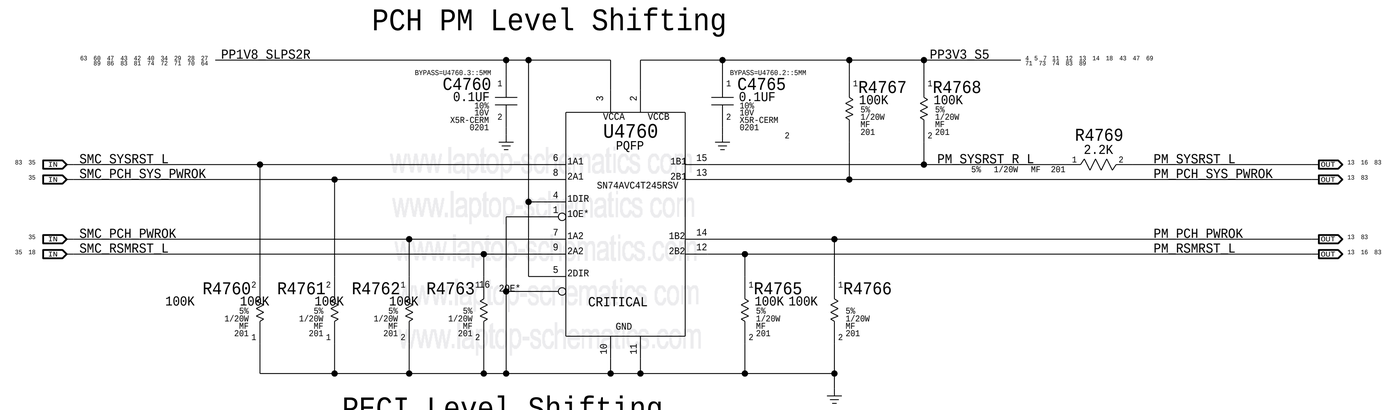

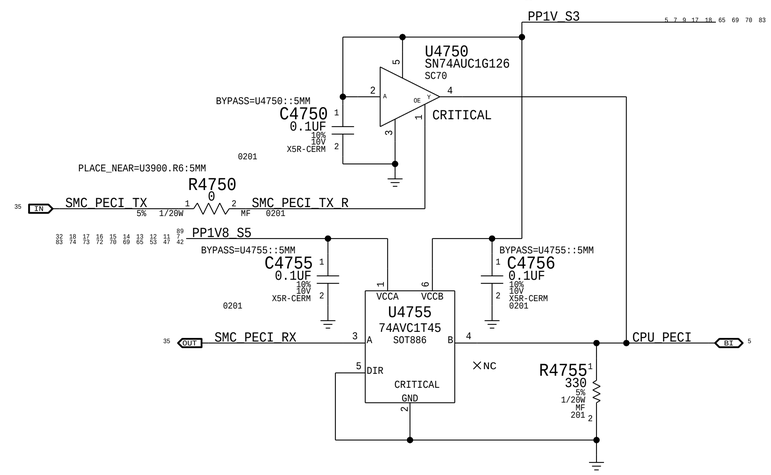

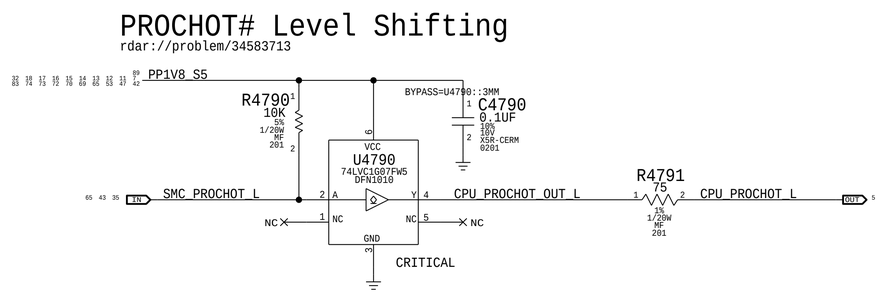

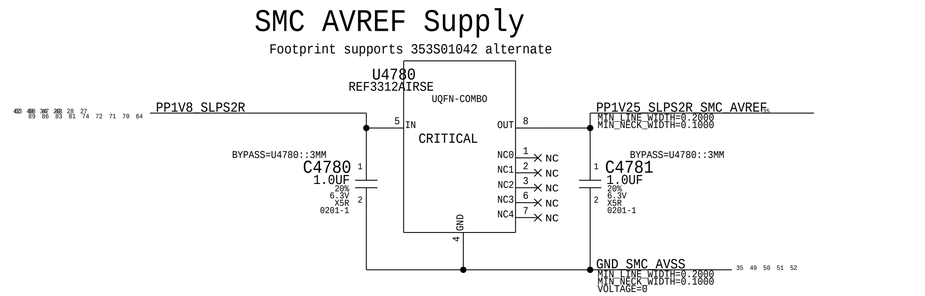

PAGE TITLE
SOC SHARED SUPPORT

Apple Inc.

DRAWING NUMBER 051-04273 | SIZE D
REVISION 4.0.0
BRANCH evt-1
PAGE 47 OF 500
SHEET 42 OF 98

NOTICE OF PROPRIETARY PROPERTY:
THE INFORMATION CONTAINED HEREIN IS THE PROPRIETARY PROPERTY OF APPLE INC.
THE POSESSOR AGREES TO THE FOLLOWING:
I TO MAINTAIN THIS DOCUMENT IN CONFIDENCE
II NOT TO REPRODUCE OR COPY IT
III NOT TO REVEAL OR PUBLISH IT IN WHOLE OR PART
IV ALL RIGHTS RESERVED

PCIe Up R2D AC Caps

PCIE_SOC_R2D_C_P<0>	C4820 0.22UF	PCIE_SOC_R2D_C_N<0>	C4821 0.22UF
PCIE_SOC_R2D_C_P<1>	C4822 0.22UF	PCIE_SOC_R2D_C_N<1>	C4823 0.22UF
PCIE_SOC_R2D_C_P<2>	C4824 0.22UF	PCIE_SOC_R2D_C_N<2>	C4825 0.22UF
PCIE_SOC_R2D_C_P<3>	C4826 0.22UF	PCIE_SOC_R2D_C_N<3>	C4827 0.22UF

Triaxial acceleration sensor

NOSTUFF U4870 etc. per <rdar://46140415>

L4870 FERR-240OHM-25%-350MHZ (0201, NOSTUFF)

U4870 BMA282 LGA

SPI_ACCEL_CS_L	CS*	SPI_AOP_SENSOR_CLK (SCX)
ACCEL_INT1	INT1	SPI_AOP_SENSOR_MOSI (SDX)
ACCEL_INT2	INT2	SPI_AOP_SENSOR_MISO_R (SDO)

Lid Detect Sensors

Clamshell Closed/Open = Low/High
SMC and U6650 isolated per <rdar://45820207>

J4800 AMR-MLB-X502

LID_OPEN_LEFT, PP1V8_SLPS2R → R4804 10K → U4802 74LVC1G32 SOT891 → IPD_LID_OPEN → SMC_LID_LEFT

LID_OPEN_RIGHT → R4805 10K → SMC_LID_RIGHT

GPIO Source Termination

I2S_SPKRAMP_L_R2D_R	R4843 20	I2S_SPKRAMP_L_R2D
I2S_SPKRAMP_L_BCLK_R	R4844 20	I2S_SPKRAMP_L_BCLK
I2S_SPKRAMP_L_LRCLK_R	R4863 20	I2S_SPKRAMP_L_LRCLK
I2S_SPKRAMP_R_R2D_R	R4845 20	I2S_SPKRAMP_R_R2D
I2S_SPKRAMP_R_BCLK_R	R4846 20	I2S_SPKRAMP_R_BCLK
I2S_SPKRAMP_R_LRCLK_R	R4864 20	I2S_SPKRAMP_R_LRCLK
I2S_CODEC_R2D_R	R4847 20	I2S_CODEC_R2D
I2S_CODEC_BCLK_R	R4848 20	I2S_CODEC_BCLK
I2S_CODEC_LRCLK_R	R4865 20	I2S_CODEC_LRCLK
SPI_TPAD_MOSI_R	R4851 20	SPI_TPAD_MOSI
SPI_TPAD_CLK_R	R4852 20	SPI_TPAD_CLK
SPI_TPAD_MISO_R	R4867 20	SPI_TPAD_MISO
SPI_MESA_MOSI_R	R4853 20	SPI_MESA_MOSI
SPI_MESA_CLK_R	R4854 20	SPI_MESA_CLK
SPI_DFR_MISO_R	R4866 20	SPI_DFR_MISO
SPI_DFR_MOSI_R	R4855 20	SPI_DFR_MOSI
SPI_DFR_CLK_R	R4856 20	SPI_DFR_CLK
SSD0_CLK24M_R	R4857 0	SSD0_CLK24M
PDM_DMIC_CLK0_R	R4859 20	PDM_DMIC_CLK0
PDM_DMIC_CLK1_R	R4860 20	PDM_DMIC_CLK1
SPI_AOP_SENSOR_MOSI_R	R4861 20	SPI_AOP_SENSOR_MOSI
SPI_AOP_SENSOR_CLK_R	R4862 20	SPI_AOP_SENSOR_CLK
SPI_AOP_SENSOR_MISO_R	R4869 20	SPI_AOP_SENSOR_MISO

Project Specific Pull-Ups

PP1V8_SLPS2R: R4895 100K — SSD_PMU_RESET_L

PP1V8_AWAKE: R4883 47K — SSD0_CLKREQ0_L; R4884 47K — SSD0_CLKREQ1_L; R4887 47K — SSD0_CLKREQ2_L; R4888 47K — SSD0_CLKREQ3_L

PP1V8_G3S: R4871 100K — SPI_ACCEL_CS_L; R4872 100K — SPI_AOP_SENSOR_CLK; R4873 100K — SPI_AOP_SENSOR_MOSI; R4874 100K — SPI_AOP_SENSOR_MISO; R4875 100K — UART_WLAN_D2R; R4876 100K — UART_WLAN_D2R_CTS_L

R4885 100K — SSD0_PCIE_RESET_L; R4886 47K — SSD0_CLK24M; R4870 47K — I2S_SPKRAMP_R_D2R

SoC Test Points

TP_SOC_AMUXOUT — PP4801

TP_SOC_TST_CLKOUT — PP4802

Unused SOC Signals

NC_PLCAM_TX_THROTTLE, NC_GNSS_HOST_TIME, NC_GNSS_DEV_WAKE, NC_SOC_WLAN_DEV_WAKE, NC_BT_ROM_BOOT_L, NC_SOC_USB_ID, NC_BTUARTMUX_SEL_PCH, NC_ALTIMETER_INT, NC_SPI_ALTIMETER_CS_L, NC_I2C_AOP_SCL, NC_I2C_AOP_SDA, NC_UART_BT_D2R, NC_UART_BT_R2D, NC_UART_BT_D2R_CTS_L, NC_UART_BT_R2D_RTS_L, NC_UART_GNSS_D2R_CTS_L, NC_UART_GNSS_R2D_RTS_L, NC_PLCAM_PROX_INT_L, NC_PLCAM_ROMEO_B2B_DETECT, NC_SMC_GFX_SELF_THROTTLE, NC_SMC_TOPBLK_SWP_L, NC_PCIEDN_WAKE_L, NC_ENET_LOW_PWR, NC_SDCONN_STATE_CHANGE_L, NC_ENET_MEDIA_SENSE, NC_SOC_WLAN_JTAG_TMS, NC_SOC_WLAN_JTAG_TCK, NC_PCC_EVENT, NC_TPAD_VIBE_L, NC_SPI_DESCRIPTOR_OVERRIDE_L, NC_DISP_GCON_INT_L, NC_PCH_GCON_INT_L, NC_SMC_FAN_1_PWM, NC_SMC_FAN_1_TACH, NC_SMC_LED_ONEWIRE, NC_SSD1_SWCLK_UART_R2D, NC_SSD1_SWDIO_UART_D2R, NC_I2C_SOC_5_SDA, NC_I2C_SOC_5_SCL, NC_DFR_TOUCH_RSVD, NC_PCHROM_SW_EN, NC_I2S_CODEC_MCLK, NC_I2S_HAWKING_D2R, NC_I2S_CODEC1_R2D_R, NC_I2S_HAWKING_BCLK_R, NC_I2S_HAWKING_LRCLK, NC_I2S_CODEC1_MCLK, NC_I2C_PLCAM_SDA, NC_I2C_PLCAM_SCL, NC_FTCAM_CLK12M_R, NC_FTCAM_RESET_L, NC_PLCAM_RX_CLK12M_R, NC_PLCAM_RX_RESET_L, NC_PLCAM_TX_CLK12M_R, NC_PLCAM_TX_RESET_L, NC_PLCAM_TX_INT

NC_PCIE_WLAN_R2D_C_P, NC_PCIE_WLAN_R2D_C_N, NC_PCIE_WLAN_D2R_P, NC_PCIE_WLAN_D2R_N, NC_PCIE_ENET_R2D_C_P, NC_PCIE_ENET_R2D_C_N, NC_PCIE_ENET_D2R_P, NC_PCIE_ENET_D2R_N, NC_PCIE_DN2_R2D_C_P, NC_PCIE_DN2_R2D_C_N, NC_PCIE_DN2_D2R_P, NC_PCIE_DN2_D2R_N, NC_PCIE_DN3_R2D_C_P, NC_PCIE_DN3_R2D_C_N, NC_PCIE_DN3_D2R_P, NC_PCIE_DN3_D2R_N, NC_PCIE_CLK100M_WLAN_P, NC_PCIE_CLK100M_WLAN_N, NC_WLAN_CLKREQ_L, NC_WLAN_PERST_L, NC_PCIE_CLK100M_ENET_P, NC_PCIE_CLK100M_ENET_N, NC_ENET_RESET_L, NC_PCIE_CLK100M_DN2_P, NC_PCIE_CLK100M_DN2_N, NC_PCIEDN2_CLKREQ_L, NC_PCIEDN2_RESET_L, NC_PCIE_CLK100M_DN3_P, NC_PCIE_CLK100M_DN3_N, NC_PCIEDN3_CLKREQ_L, NC_PCIEDN3_RESET_L, NC_PCIE_SSD1_R2D_C_P<0>, NC_PCIE_SSD1_R2D_C_N<0>, NC_PCIE_SSD1_D2R_P<0>, NC_PCIE_SSD1_D2R_N<0>, NC_PCIE_SSD1_R2D_C_P<1>, NC_PCIE_SSD1_R2D_C_N<1>, NC_PCIE_SSD1_D2R_P<1>, NC_PCIE_SSD1_D2R_N<1>, NC_PCIE_SSD1_R2D_C_P<2>, NC_PCIE_SSD1_R2D_C_N<2>, NC_PCIE_SSD1_D2R_P<2>, NC_PCIE_SSD1_D2R_N<2>, NC_PCIE_SSD1_R2D_C_P<3>, NC_PCIE_SSD1_R2D_C_N<3>, NC_PCIE_SSD1_D2R_P<3>, NC_PCIE_SSD1_D2R_N<3>, NC_PCIE_CLK100M_SSD1_01_P, NC_PCIE_CLK100M_SSD1_01_N, NC_SSD1_CLKREQ0_L, NC_SSD1_CLKREQ1_L, NC_PCIE_CLK100M_SSD1_23_P, NC_PCIE_CLK100M_SSD1_23_N, NC_SSD1_CLKREQ2_L, NC_SSD1_CLKREQ3_L, NC_SSD1_PCIE_RESET_L, NC_SSD1_CLK24M_R, NC_WLAN_CONTEXT_A, NC_WLAN_CONTEXT_B

Remote Feedback Sense (Buck 0, 2 & 5)

XW4820	PPVDDCPU_AWAKE	R4820	PVDDCPUAWAKE_FB
XW4821	PP0V8_SLPDDR	R4821	P0V8SLPDDR_FB
XW4822	PP0V9_SLPDDR	R4822	P0V9SLPDDR_FB

Droop Circuit

PP3V3_S5 → C4804 0.1UF → CRITICAL U4801 LMV331 SC70-5

PPBUS_HS_CPU → R4802 665K (0.1% 1/20W 1K 0201) → PBUS_DIVIDER_REF

PBUS_DIVIDER → R4800 127K 1% 1/20W MF 201; NOSTUFF C4805 0.1UF

R4806 100K → UVP_DIS_L

PBUS_DIVIDER_OUT → U4800 SLG4AP41473 STQFN CRITICAL (ENABLE, COMP_INPUT, THROTTLE*_TEST_OUTPUT, DUMMY_OUTPU_COMP, VREF_1V2, CPU_THROTTLE*, GPU_THROTTLE*, VDD, GND)

PBUS_DIVIDER_REF → U4800

SMC_PROCHOT_L → U4800 CPU_THROTTLE*

HPD KSF Comp Circuit

R4830 needs to be characterized and adjusted if necessary

DP_INT_HPD → R4830 4.7K → XDP_DP_INT_HPD

DP_INT_HPD_L → CRITICAL Q4830 SSM6N15AFEAP SOT563

CRITICAL Q4830 SSM6N15AFEAP SOT563 → DP_INT_HPD_MASK

BOM_COST_GROUP=SOC

PAGE TITLE: SOC PROJECT SUPPORT

Apple Inc.

NOTICE OF PROPRIETARY PROPERTY:
THE INFORMATION CONTAINED HEREIN IS THE PROPRIETARY PROPERTY OF APPLE INC.
THE POSESSOR AGREES TO THE FOLLOWING:
I TO MAINTAIN THIS DOCUMENT IN CONFIDENCE
II NOT TO REPRODUCE OR COPY IT
III NOT TO REVEAL OR PUBLISH IT IN WHOLE OR PART
IV ALL RIGHTS RESERVED

DRAWING NUMBER: 051-04273 SIZE: D
REVISION: 4.0.0
BRANCH: evt-1
PAGE: 48 OF 500
SHEET: 43 OF 98

T151 FLEX CONNECTOR

ISOLATE FROM OTHER COMPONENTS/NETS AS MUCH AS POSSIBLE

ESD Filters

R4912 0 5% 1/20W MF 0201
SPI_MESA_MISO (OUT) — SPI_MESA_MISO_CONN
C4952 56PF 5% 25V NP0-C0G 0201 NOSTUFF

R4953 0 5% 1/20W MF 0201
MESA_INT (OUT) — MESA_INT_CONN
C4953 100PF 5% 25V C0G 0201 NOSTUFF

R4954 0 5% 1/20W MF 0201
MESA_BOOST_EN — MESA_BOOST_EN_CONN (IN)
C4954 100PF 5% 25V C0G 0201 NOSTUFF

ISOLATE FROM OTHER COMPONENTS/NETS AS MUCH AS POSSIBLE

ESD Filters

R4950 0 5% 1/20W MF 0201
SPI_MESA_MOSI_CONN — SPI_MESA_MOSI (IN)
C4950 56PF 5% 25V NP0-C0G 0201 NOSTUFF

R4951 0 5% 1/20W MF 0201
SPI_MESA_CLK_CONN — SPI_MESA_CLK (IN)
C4951 56PF 5% 25V NP0-C0G 0201 NOSTUFF

R4911 0 5% 1/20W MF 0201
PMU_ONOFF_R_L_CONN — PMU_ONOFF_L (OUT)
C4955 100PF 5% 25V C0G 0201

MOJAVE 16V BOOST

Mesa Power Sequencing Requirements

Power On: 1V8 -> 3V3 -> 16V0

Output Voltage	16.0V +/- 2%
Iout (max avg)	6mA
OCP (min)	13 mA
Active Discharge	15 mA sink
Max Output Cap	0.5uF @ 16V

PP3V3_G3H_RTC_MESA
L4901 1.0UH-0.4A-0.636OHM 0402 — PLACE_NEAR=U4900:5MM; MIN_LINE_WIDTH=0.2000; MIN_NECK_WIDTH=0.1000; DIDT=TRUE
PP3V3_G3H_MESA_SW
BYPASS=U4900.A2::3MM
C4910 10UF 20% 6.3V CERM-X5R 0402-9
MESA_BOOST_EN
U4900 LM3638A0 BGA
B1 SW; A2 VIN; VOUT; C3; B2 EN_M; A3 EN_S; C2 LDOIN; PMID C1; PGND A1; AGND B3
PP17V0_MOJAVE_LDOIN
C4923 2.2UF 20% 25V X5R 0402-3

Load Cap:6.6uF nom
EDP:13.75mA
MIN_LINE_WIDTH=0.2000; MIN_NECK_WIDTH=0.1000
PP16V0_MESA
C4924 2.2UF 20% 25V X5R 0402-3
C4925 2.2UF 20% 25V X5R 0402-3
C4926 56PF 5% 25V NP0-C0G 0201
BYPASS=U4900.C3::4MM; BYPASS=U4900.C3::4MM; BYPASS=U4900.C3::5MM

EMC Filter

FL4900 80-OHM-25%-500MA 0201
MIN_LINE_WIDTH=0.2000; MIN_NECK_WIDTH=0.1000
PP16V0_MESA_FILT_CONN
C4927 100PF 5% 25V C0G 0201

3.0V MESA

Output Voltage	3.0V +/- 2%
Iout (max avg)	250mA
Dropout Voltage	155mV
OCP (min)	250 mA
Active Discharge	280 Ohm Typ

PP3V3_G3H_RTC_MESA
C4911 1UF 10% 10V X5R-CERM 0402 — BYPASS=U4910.4::3MM
PP1V8_MESA
U4910 NCP160AMX300 XDFN-COMBO-THICKSTNCL — IN 4; EN 3; OUT 1; GND EPAD 2 5
MIN_LINE_WIDTH=0.2000; MIN_NECK_WIDTH=0.1000
Load Cap:14.3uF nom
EDP:100mA
PP3V0_MESA
BYPASS=U4910.1::3MM
C4916 1UF 10% 10V X5R-CERM 0402

EMC Filter

FL4910 80-OHM-25%-500MA 0201
MIN_LINE_WIDTH=0.2000; MIN_NECK_WIDTH=0.1000; VOLTAGE=3
PP3V0_MESA_FILT_CONN
C4920 2.2UF 20% 6.3V X5R-CERM 0201
C4921 2.2UF 20% 6.3V X5R-CERM 0201
C4922 2.2UF 20% 6.3V X5R-CERM 0201
C4928 0.1UF 10% 10V X6S-CERM 0201
C4929 100PF 5% 25V C0G 0201

PP1V8_G3S — R4922 100K 5% 1/20W MF 201 — MESA_PWR_EN
PP1V8_MESA — R4924 100K 5% 1/20W MF 201 — SPI_MESA_MISO
R4923 100K 5% 1/20W MF 201 — MESA_BOOST_EN

1.8V MESA

Output Voltage	1.825V +/- 2%
Iout (max avg)	250mA
Dropout Voltage	50mV Typ @ 100mA
OCP (min)	250 mA
Active Discharge	230 Ohm Typ
Max Output Cap	10uF

PP3V3_G3H_RTC_MESA
C4912 1UF 10% 10V X5R-CERM 0402 — BYPASS=U4920.4::3MM
MESA_PWR_EN (IN)
U4920 LP5907SNX-1.825 X2SON-COMBO-THICKSTNCL — VIN 4; EN 3; VOUT 1; GND EPAD 2 5
MIN_LINE_WIDTH=0.2000; MIN_NECK_WIDTH=0.1000
Load Cap:3.4uF nom
EDP:0.5mA
PP1V8_MESA
BYPASS=U4920.1::3MM
C4914 1UF 10% 10V X5R-CERM 0402

EMC Filter

FL4920 80-OHM-25%-500MA 0201
MIN_LINE_WIDTH=0.2000; MIN_NECK_WIDTH=0.1000
PP1V8_MESA_FILT_CONN
C4918 2.2UF 20% 6.3V X5R-CERM 0201
C4917 100PF 5% 25V C0G 0201

BOM_COST_GROUP=MESA

PAGE TITLE	T151
Apple Inc.	
DRAWING NUMBER	051-04273
SIZE	D
REVISION	4.0.0
BRANCH	evt-1
PAGE	49 OF 500
SHEET	44 OF 98

NOTICE OF PROPRIETARY PROPERTY:
THE INFORMATION CONTAINED HEREIN IS THE PROPRIETARY PROPERTY OF APPLE INC.
THE POSESSOR AGREES TO THE FOLLOWING:
I TO MAINTAIN THIS DOCUMENT IN CONFIDENCE
II NOT TO REPRODUCE OR COPY IT
III NOT TO REVEAL OR PUBLISH IT IN WHOLE OR PART
IV ALL RIGHTS RESERVED

www.laptop-schematics.com

STOCKHOLM

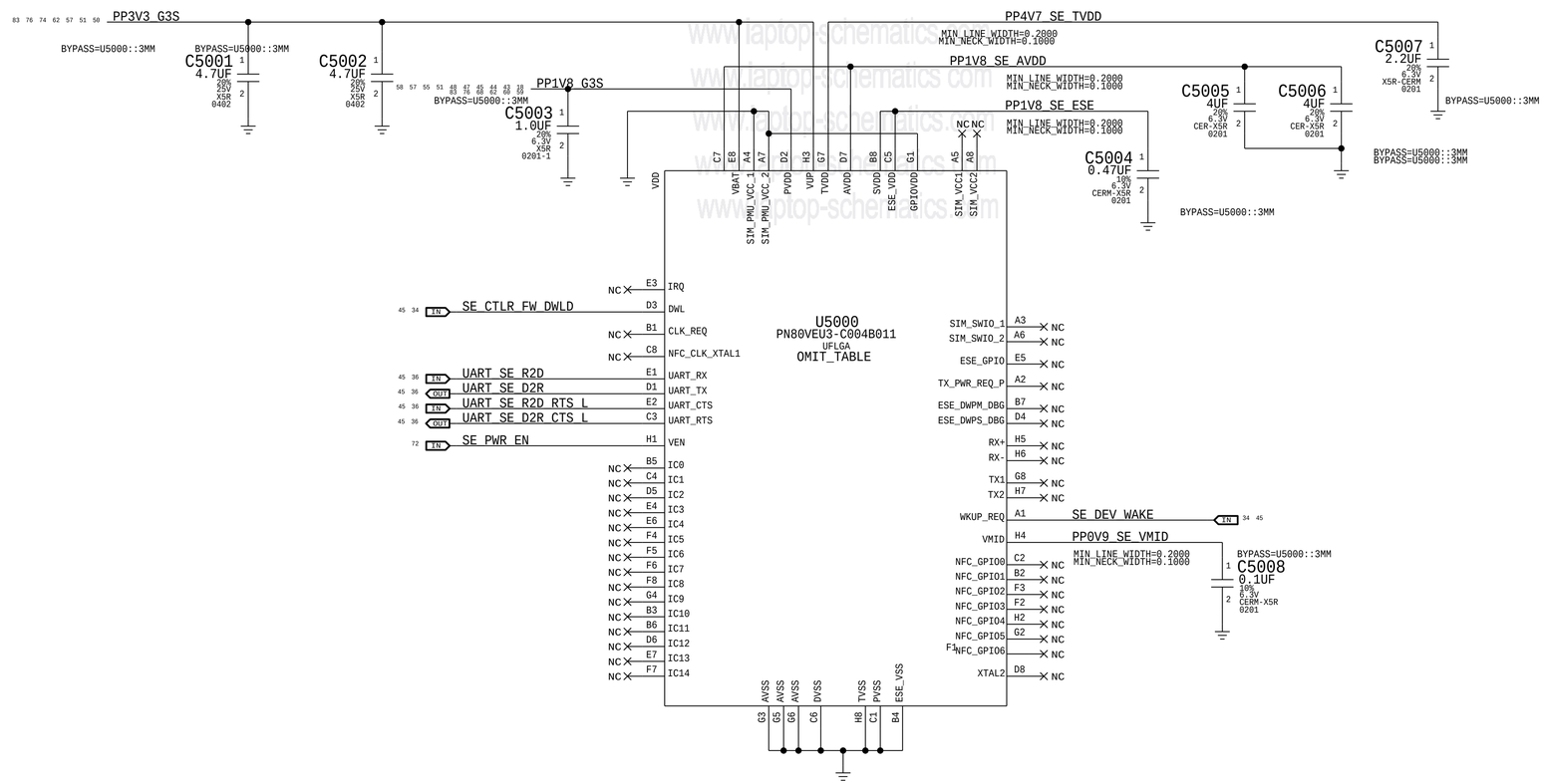

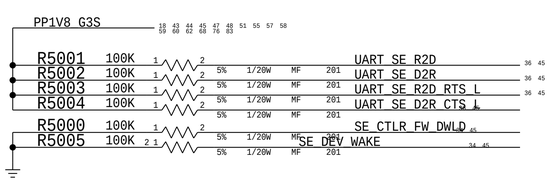

BOM_COST_GROUP=SOC

PAGE TITLE
Secure Element

Apple Inc.

DRAWING NUMBER 051-04273
SIZE D
REVISION 4.0.0
BRANCH evt-1
PAGE 50 OF 500
SHEET 45 OF 98

NOTICE OF PROPRIETARY PROPERTY:
THE INFORMATION CONTAINED HEREIN IS THE PROPRIETARY PROPERTY OF APPLE INC.
THE POSESSOR AGREES TO THE FOLLOWING:
I TO MAINTAIN THIS DOCUMENT IN CONFIDENCE
II NOT TO REPRODUCE OR COPY IT
III NOT TO REVEAL OR PUBLISH IT IN WHOLE OR PART
IV ALL RIGHTS RESERVED

T139 Support

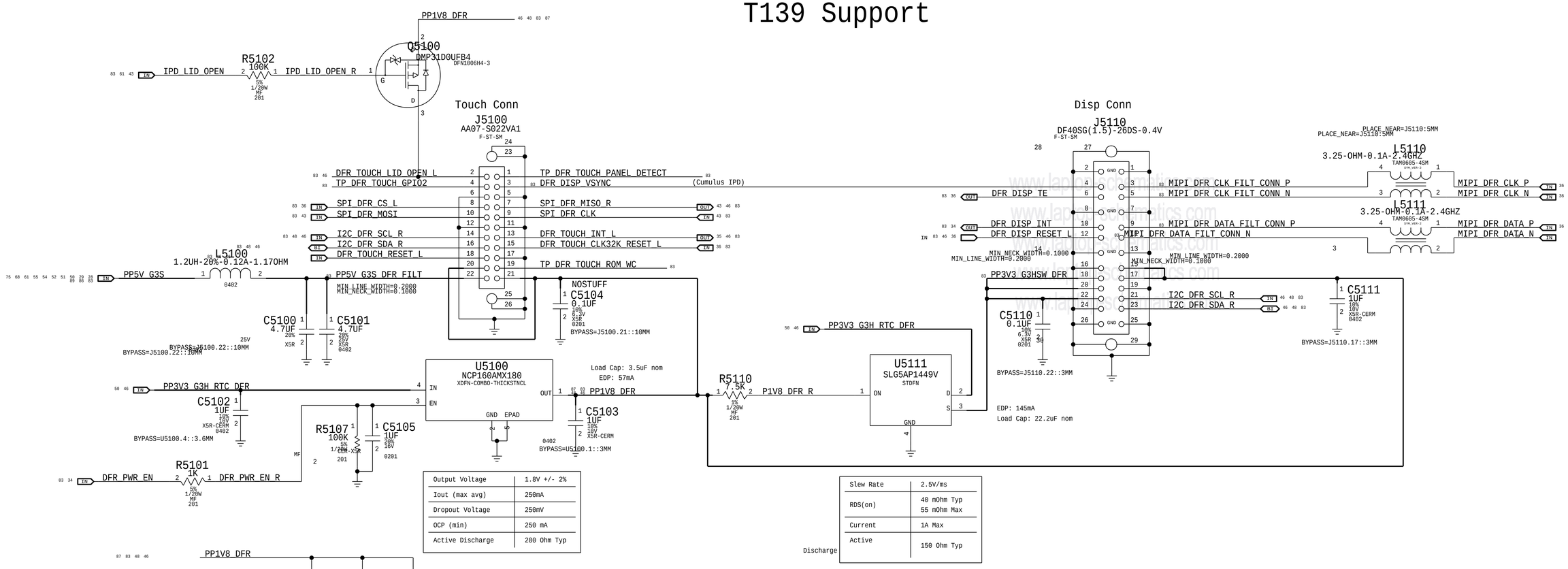

Output Voltage	1.8V +/- 2%
Iout (max avg)	250mA
Dropout Voltage	250mV
OCP (min)	250 mA
Active Discharge	280 Ohm Typ

	Slew Rate	2.5V/ms
	RDS(on)	40 mOhm Typ 55 mOhm Max
	Current	1A Max
Discharge	Active	150 Ohm Typ

BOM_COST_GROUP=DFR

PAGE TITLE
T139 SUPPORT

Apple Inc.

DRAWING NUMBER 051-04273
SIZE D
REVISION 4.0.0
BRANCH evt-1
PAGE 51 OF 500
SHEET 46 OF 98

NOTICE OF PROPRIETARY PROPERTY:
THE INFORMATION CONTAINED HEREIN IS THE PROPRIETARY PROPERTY OF APPLE INC.
THE POSESSOR AGREES TO THE FOLLOWING:
I TO MAINTAIN THIS DOCUMENT IN CONFIDENCE
II NOT TO REPRODUCE OR COPY IT
III NOT TO REVEAL OR PUBLISH IT IN WHOLE OR PART
IV ALL RIGHTS RESERVED

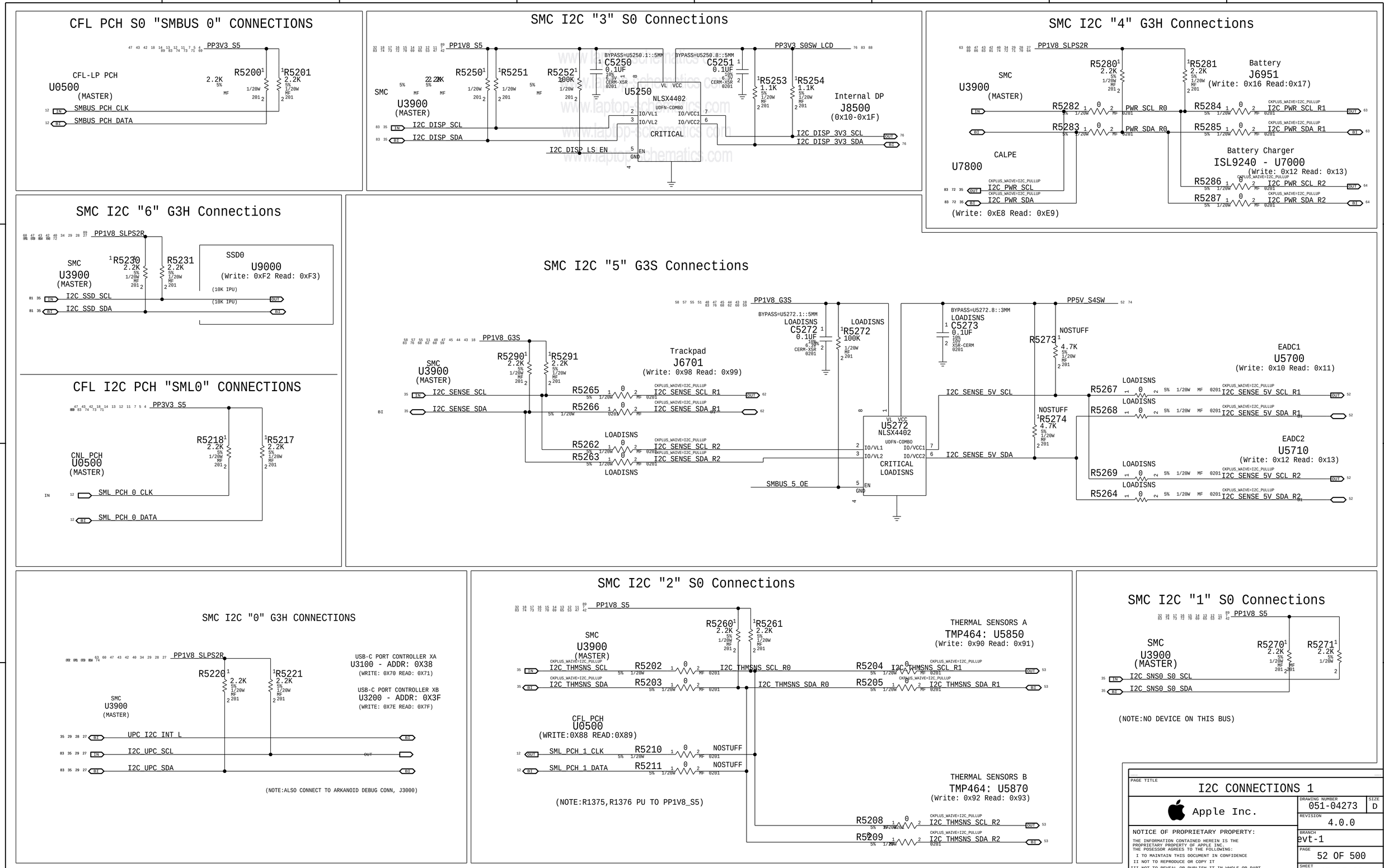
CFL PCH S0 "SMBUS 0" CONNECTIONS
PP3V3_S5
CFL-LP PCH
U0500
(MASTER)
R5200 2.2K
R5201 2.2K
SMBUS_PCH_CLK
SMBUS_PCH_DATA
SMC I2C "3" S0 Connections
PP1V8_S5
PP3V3_S0SW_LCD
BYPASS=U5250.1::5MM
BYPASS=U5250.8::5MM
C5250 0.1UF
C5251 0.1UF
R5250 2.2K
R5251 2.2K
R5252 100K
R5253 1.1K
R5254 1.1K
SMC
U3900
(MASTER)
U5250
NLSX4402
UDFN-COMBO
CRITICAL
Internal DP
J8500
(0x10-0x1F)
I2C_DISP_SCL
I2C_DISP_SDA
I2C_DISP_LS_EN
I2C_DISP_3V3_SCL
I2C_DISP_3V3_SDA
SMC I2C "4" G3H Connections
PP1V8_SLPS2R
SMC
U3900
(MASTER)
R5280 2.2K
R5281 2.2K
Battery
J6951
(Write: 0x16 Read:0x17)
R5282
R5283
PWR_SCL_R0
PWR_SDA_R0
R5284
R5285
I2C_PWR_SCL_R1
I2C_PWR_SDA_R1
CALPE
U7800
I2C_PWR_SCL
I2C_PWR_SDA
(Write: 0xE8 Read: 0xE9)
Battery Charger
ISL9240 - U7000
(Write: 0x12 Read: 0x13)
R5286
R5287
I2C_PWR_SCL_R2
I2C_PWR_SDA_R2
SMC I2C "6" G3H Connections
PP1V8_SLPS2R
SMC
U3900
(MASTER)
R5230 2.2K
R5231 2.2K
SSD0
U9000
(Write: 0xF2 Read: 0xF3)
(10K IPU)
I2C_SSD_SCL
I2C_SSD_SDA
SMC I2C "5" G3S Connections
PP1V8_G3S
PP5V_S4SW
BYPASS=U5272.1::5MM
BYPASS=U5272.8::3MM
LOADISNS
C5272 0.1UF
C5273 0.1UF
R5272 100K
R5273 4.7K
NOSTUFF
R5274 4.7K
SMC
U3900
(MASTER)
R5290 2.2K
R5291 2.2K
Trackpad
J6701
(Write: 0x98 Read: 0x99)
I2C_SENSE_SCL
I2C_SENSE_SDA
R5265
R5266
I2C_SENSE_SCL_R1
I2C_SENSE_SDA_R1
R5262
R5263
I2C_SENSE_SCL_R2
I2C_SENSE_SDA_R2
U5272
NLSX4402
UDFN-COMBO
CRITICAL
LOADISNS
SMBUS_5_OE
I2C_SENSE_5V_SCL
I2C_SENSE_5V_SDA
EADC1
U5700
(Write: 0x10 Read: 0x11)
R5267
R5268
I2C_SENSE_5V_SCL_R1
I2C_SENSE_5V_SDA_R1
EADC2
U5710
(Write: 0x12 Read: 0x13)
R5269
R5264
I2C_SENSE_5V_SCL_R2
I2C_SENSE_5V_SDA_R2
CFL I2C PCH "SML0" CONNECTIONS
PP3V3_S5
CNL PCH
U0500
(MASTER)
R5218 2.2K
R5217 2.2K
SML_PCH_0_CLK
SML_PCH_0_DATA
SMC I2C "0" G3H CONNECTIONS
PP1V8_SLPS2R
R5220 2.2K
R5221 2.2K
SMC
U3900
(MASTER)
UPC_I2C_INT_L
I2C_UPC_SCL
I2C_UPC_SDA
USB-C PORT CONTROLLER XA
U3100 - ADDR: 0X38
(WRITE: 0X70 READ: 0X71)
USB-C PORT CONTROLLER XB
U3200 - ADDR: 0X3F
(WRITE: 0X7E READ: 0X7F)
(NOTE:ALSO CONNECT TO ARKANOID DEBUG CONN, J3000)
SMC I2C "2" S0 Connections
PP1V8_S5
R5260 2.2K
R5261 2.2K
SMC
U3900
(MASTER)
I2C_THMSNS_SCL
I2C_THMSNS_SDA
R5202
R5203
I2C_THMSNS_SCL_R0
I2C_THMSNS_SDA_R0
THERMAL SENSORS A
TMP464: U5850
(Write: 0x90 Read: 0x91)
R5204
R5205
I2C_THMSNS_SCL_R1
I2C_THMSNS_SDA_R1
CFL_PCH
U0500
(WRITE:0X88 READ:0X89)
SML_PCH_1_CLK
SML_PCH_1_DATA
R5210
R5211
NOSTUFF
(NOTE:R1375,R1376 PU TO PP1V8_S5)
THERMAL SENSORS B
TMP464: U5870
(Write: 0x92 Read: 0x93)
R5208
R5209
I2C_THMSNS_SCL_R2
I2C_THMSNS_SDA_R2
SMC I2C "1" S0 Connections
PP1V8_S5
SMC
U3900
(MASTER)
R5270 2.2K
R5271 2.2K
I2C_SNS0_S0_SCL
I2C_SNS0_S0_SDA
(NOTE:NO DEVICE ON THIS BUS)
PAGE TITLE
I2C CONNECTIONS 1
Apple Inc.
DRAWING NUMBER
051-04273
SIZE
D
REVISION
4.0.0
NOTICE OF PROPRIETARY PROPERTY:
THE INFORMATION CONTAINED HEREIN IS THE PROPRIETARY PROPERTY OF APPLE INC.
THE POSESSOR AGREES TO THE FOLLOWING:
I TO MAINTAIN THIS DOCUMENT IN CONFIDENCE
II NOT TO REPRODUCE OR COPY IT
III NOT TO REVEAL OR PUBLISH IT IN WHOLE OR PART
IV ALL RIGHTS RESERVED
BRANCH
evt-1
PAGE
52 OF 500
SHEET
47 OF 98
BOM_COST_GROUP=SMC

AP I2C "0" G3S Connections

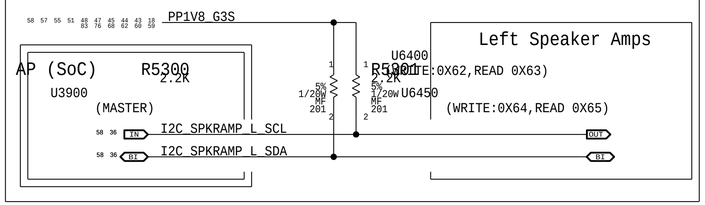

AP I2C "1" G3S Connections

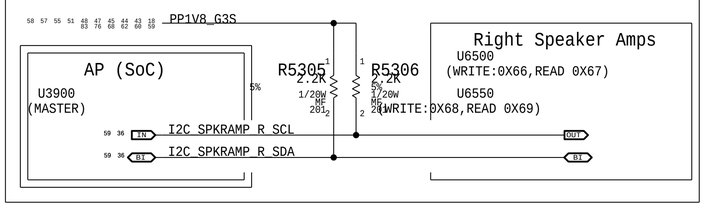

AP I2C "2" Codec Connections

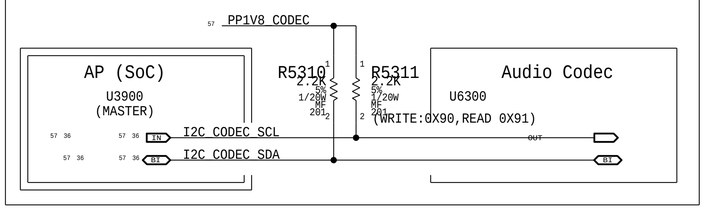

AP I2C "3" G3S Connections

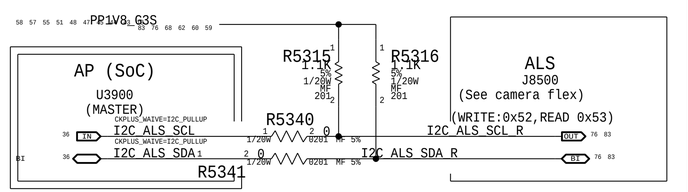

AP I2C "4" DFR Connections

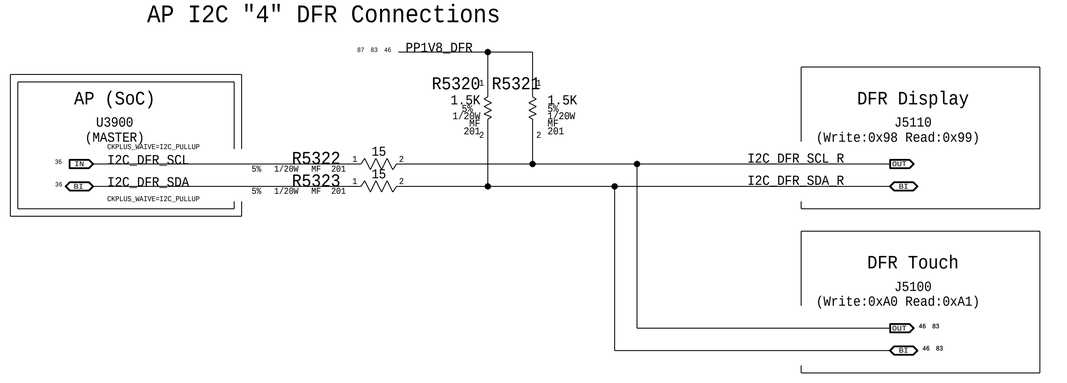

ISP I2C "0" G3S Connections

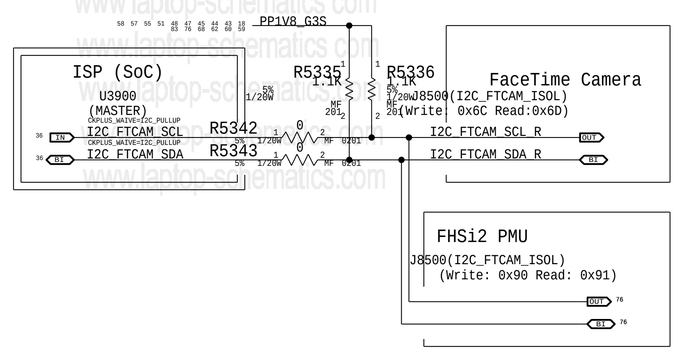

www.laptop-schematics.com

Device	SMC IF	ADDR. (8b)
ACE XA	I2C0	0X70/1
ACE XB	I2C0	0X7E/F
NC.	I2C1	
TEMP. SENSOR A	I2C2	0X90/1
TEMP. SENSOR B	I2C2	0X92/3
TCON	I2C3	0X10-1F
Charger	I2C4	0X12/3
Battery	I2C4	0X16/7
Calpe	I2C4	0XE8/9
Trackpad	I2C5	0X98/9
EADC1	I2C5	0X10/1
EADC2	I2C5	0X12/3
SSD	I2C6	0XF2/3
SOC IF (AP)		
Left Spkr Amp.(U6400)	I2C0	0X62/3
Left Spkr Amp.(U6450)	I2C0	0X64/5
Right Spkr Amp.(U6500)	I2C1	0X66/7
Right Spkr Amp.(U6550)	I2C1	0X68/9
Audio Codec	I2C2	0X90/1
ALS	I2C3	0X52/3
DFR Display	I2C4	0X98/9
DFR Touch	I2C4	0XA0/1
NC.	I2C5	
Spkr ID1	I2C6	
Spkr ID0	I2C6	
SIP IF (ISP)		
FT Camera	I2C0	0X6C/D
FHSi2	I2C0	0X90/1
NC.	I2C1	
AOP IF		
NC.	I2C0	

BOM_COST_GROUP=SMC

PAGE TITLE
I2C CONNECTIONS 2

Apple Inc.

DRAWING NUMBER 051-04273 SIZE D
REVISION 4.0.0
BRANCH evt-1
PAGE 53 OF 500
SHEET 48 OF 98

NOTICE OF PROPRIETARY PROPERTY:
THE INFORMATION CONTAINED HEREIN IS THE PROPRIETARY PROPERTY OF APPLE INC.
THE POSESSOR AGREES TO THE FOLLOWING:
I TO MAINTAIN THIS DOCUMENT IN CONFIDENCE
II NOT TO REPRODUCE OR COPY IT
III NOT TO REVEAL OR PUBLISH IT IN WHOLE OR PART
IV ALL RIGHTS RESERVED

CPU High Side Current Sense (IC0R)

Gain: 100x, EDP: 8.868 A
Rsense: 0.002 (R5400)
Vsense: 17.7 mV, Range: 12.5 A
SMC ADC: 00

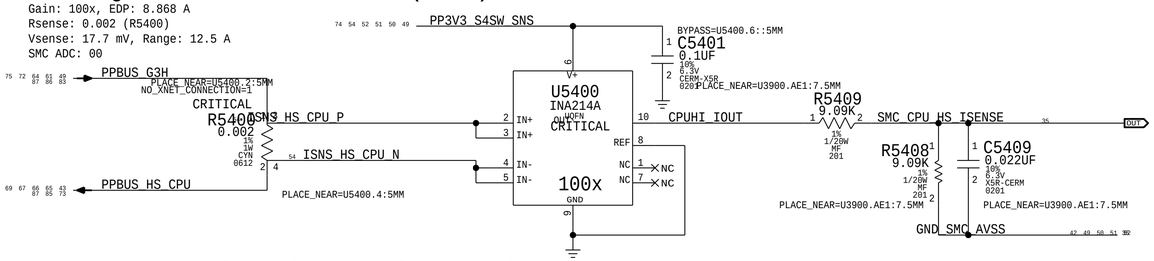

OTHER 5V High Side Current Sense (IO5R)

Gain: 100x, EDP: 5.227 A
Rsense: 0.005 (R5410) or SHORT
Vsense: 26.1 mV, Range: 6.0 A
MUX: A1

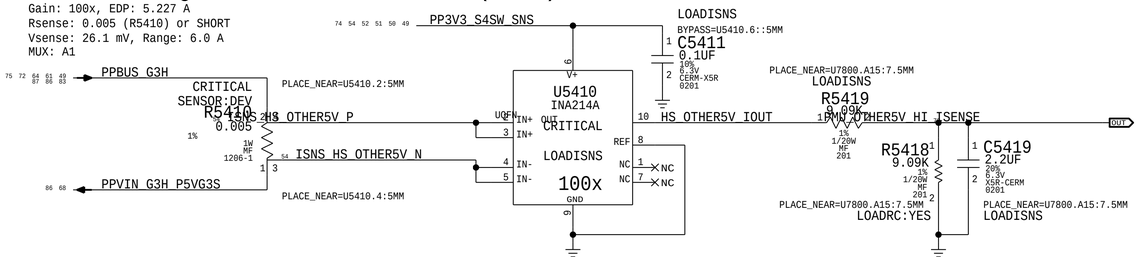

OTHER 3.3V High Side Current Sense (IO3R)

Gain: 100x, EDP: 6.736 A
Rsense: 0.003 (R5440) or SHORT
Vsense: 20.2 mV, Range: 10 A
MUX: A0

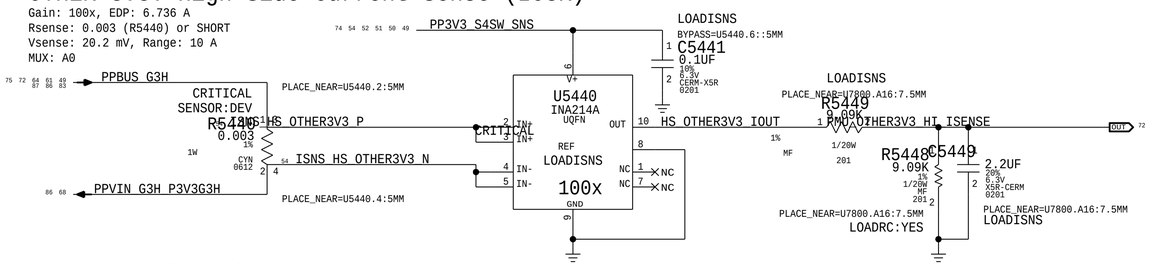

3.3V RTC High Side Current Sense (IR3R)

Gain: 100x, EDP: 2.413 A
Rsense: 0.01 (R5420) or SHORT
Vsense: 24.1 mV, Range: 3.3 A
EADC1: CH4

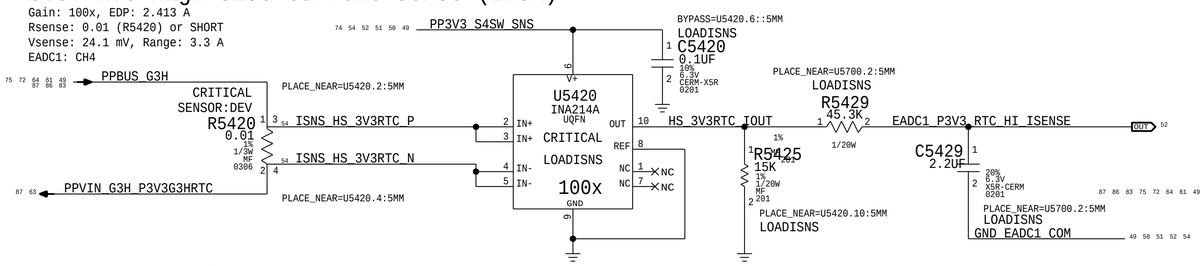

NAND Current Sense (IHNR)

Gain: 100x, EDP: 1.471 A
Rsense: 0.02 (R5460) or SHORT
Vsense: 29.4 mV, Range: 1.5 A
MUX: A6

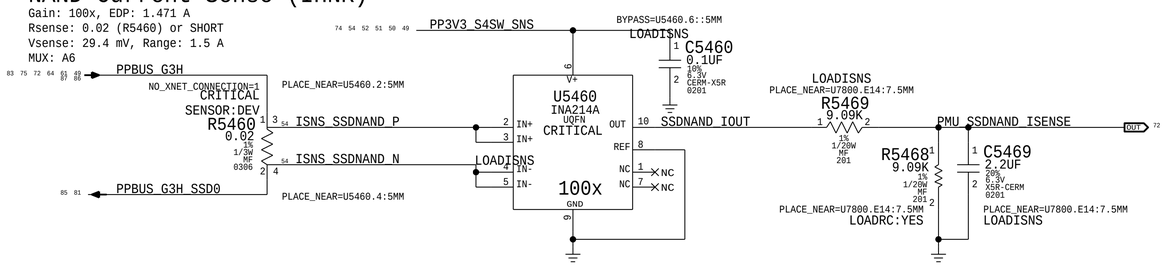

PART NUMBER	QTY	DESCRIPTION	REFERENCE DES	CRITICAL	BOM OPTION
117S0008	3	RES,MTL FLIM,100K,1/16W,0201,SMD,LF	R5418,R5448,R5478		LOADRC:NO

LCD Backlight Current Sense (IBLR)

Gain: 100x. EDP: 0.902 A
Rsense: 0.025 (R8400)
Vsense: 22.6 mV, Range: 1.32 A
EADC1: CH0

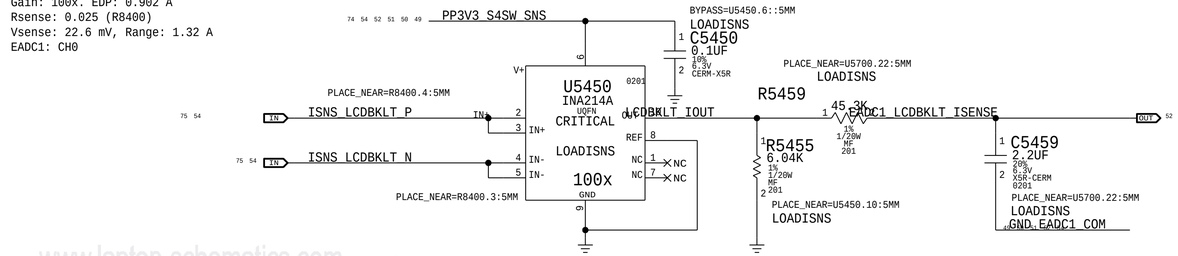

Left AMP Current Sense (IALR)

Gain: 200x, EDP: 2.6 A
Rsense: 0.005 (R54A0) or SHORT
Vsense: 13 mV, Range: 3.3 A
EADC1: CH1

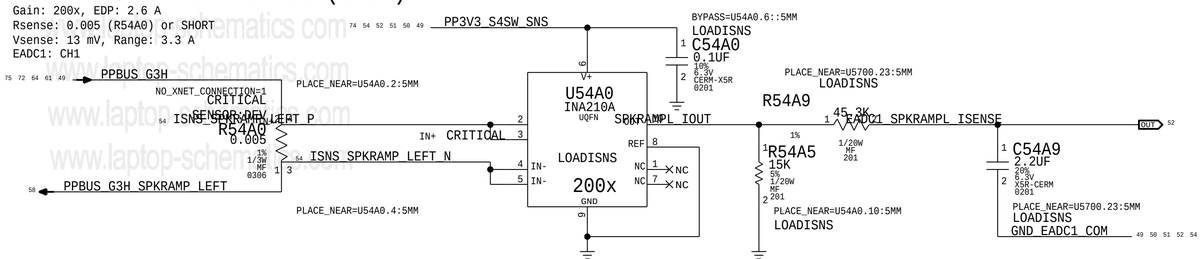

Right AMP Current Sense (IARR)

Gain: 200x, EDP: 2.6 A
Rsense: 0.005 (R54B0) or SHORT
Vsense: 13 mV, Range: 3.3 A
EADC2: CH6

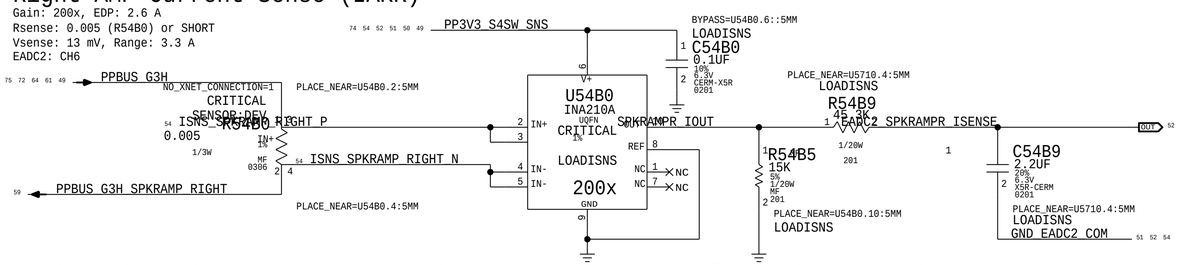

PBUS Voltage Sense & Enable (VP0R)

GAIN: 0.089X
VNOMINAL: 12.6 V, RANGE: 14.05 V
SMC ADC: 01

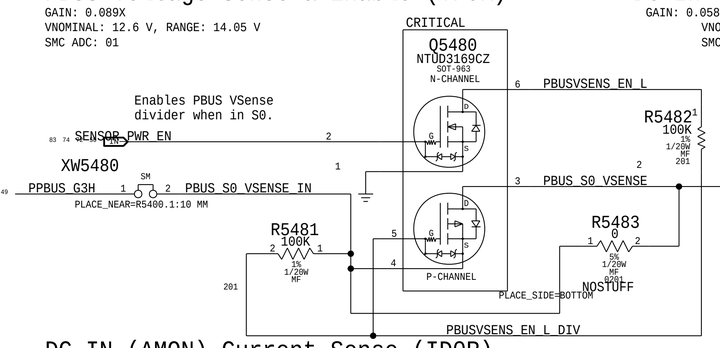

DC In Voltage Sense (VD0R)

GAIN: 0.058X
VNOMINAL: 16.5 V, RANGE: 21.45 V
SMC ADC: 04

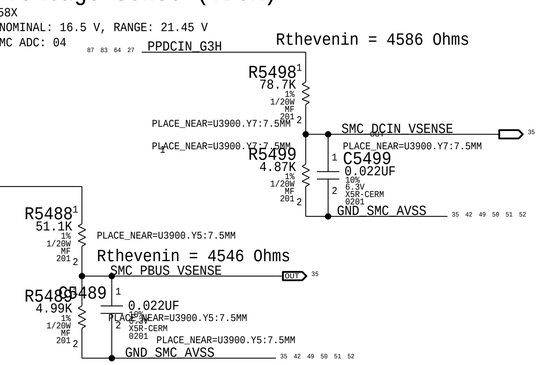

DC-IN (AMON) Current Sense (ID0R)

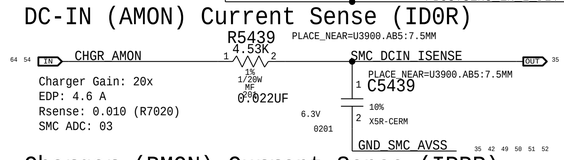

Charger Gain: 20x
EDP: 4.6 A
Rsense: 0.010 (R7020)
SMC ADC: 03

Charger (BMON) Current Sense (IPBR)

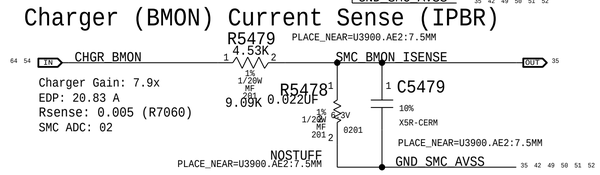

Charger Gain: 7.9x
EDP: 20.83 A
Rsense: 0.005 (R7060)
SMC ADC: 02

BOM_COST_GROUP=SENSORS

PAGE TITLE
POWER SENSORS HIGH SIDE

Apple Inc.

DRAWING NUMBER 051-04273
SIZE D
REVISION 4.0.0
BRANCH evt-1
PAGE 54 OF 500
SHEET 49 OF 98

NOTICE OF PROPRIETARY PROPERTY:
THE INFORMATION CONTAINED HEREIN IS THE PROPRIETARY PROPERTY OF APPLE INC.
THE POSESSOR AGREES TO THE FOLLOWING:
I TO MAINTAIN THIS DOCUMENT IN CONFIDENCE
II NOT TO REPRODUCE OR COPY IT
III NOT TO REVEAL OR PUBLISH IT IN WHOLE OR PART
IV ALL RIGHTS RESERVED

CPU VCCIO Current Sense (IC1C)

Gain: 200x, EDP: 3.6 A
Rsense: 0.003 (R8102) or SHORT
Vsense: 10.8 mV, Range: 5 A
PMU AMUX: A3

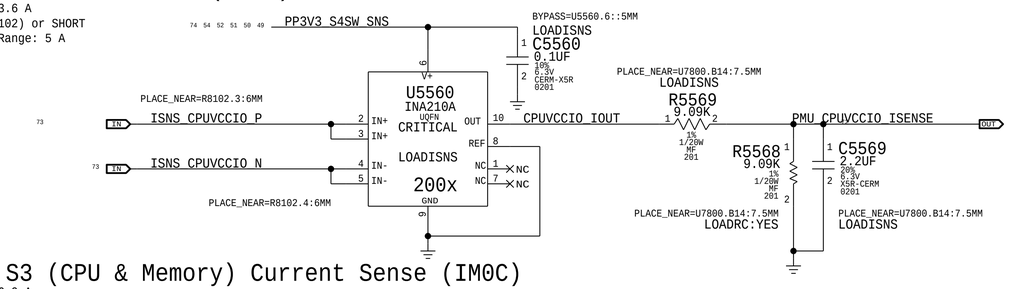

DDR 1.2V S3 (CPU & Memory) Current Sense (IM0C)

Gain: 200x, EDP: 6.9 A
Rsense: 0.002 (R8118) or SHORT
Vsense: 13.8 mV, Range: 7.5 A
PMU AMUX: A4

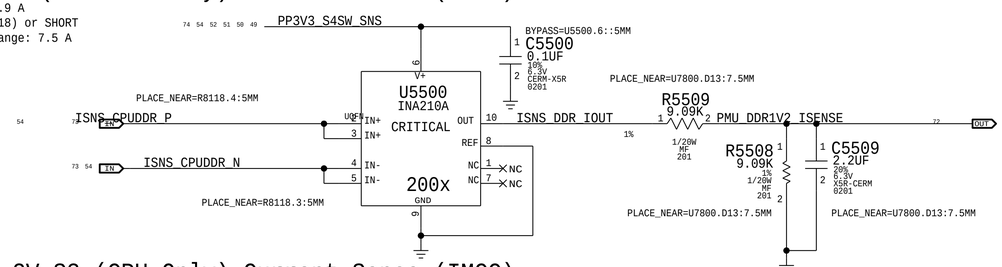

CPU DDR 1.2V S3 (CPU Only) Current Sense (IMCC)

Gain: 200x, EDP: 2.6 A
Rsense: 0.005 (R5510) or SHORT
Vsense: 13 mV, Range: 3 A
PMU AMUX: B2

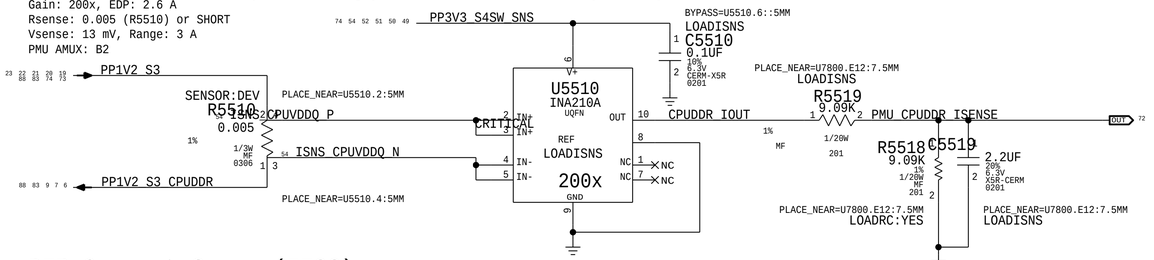

DFR Current Sense (IF3C)

Gain: 100x, EDP: 0.75 A
Rsense: 0.025 (R5520) or SHORT
Vsense: 18.8 mV, Range: 1.32 A
EADC1: CH3

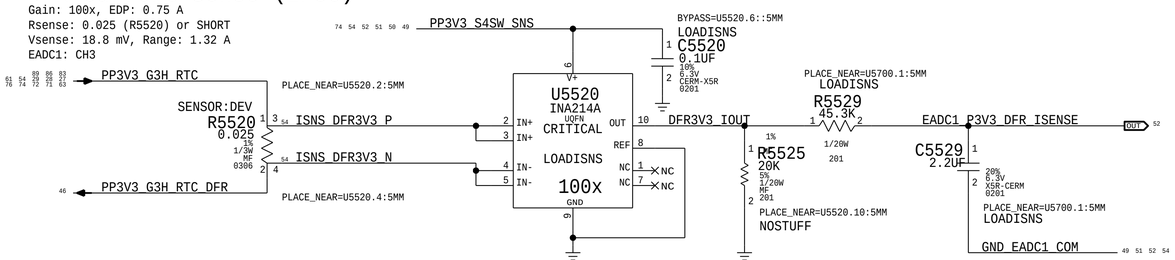

WLANBT 3.3V Current Sense (IW3C)

Gain: 163.3x, EDP: 1.698 A
Rsense: 0.003 (R5530) or Rsense SHORT
VSENSE: 5.09 MV, RANGE: 2.55 A
SMC ADC: 05

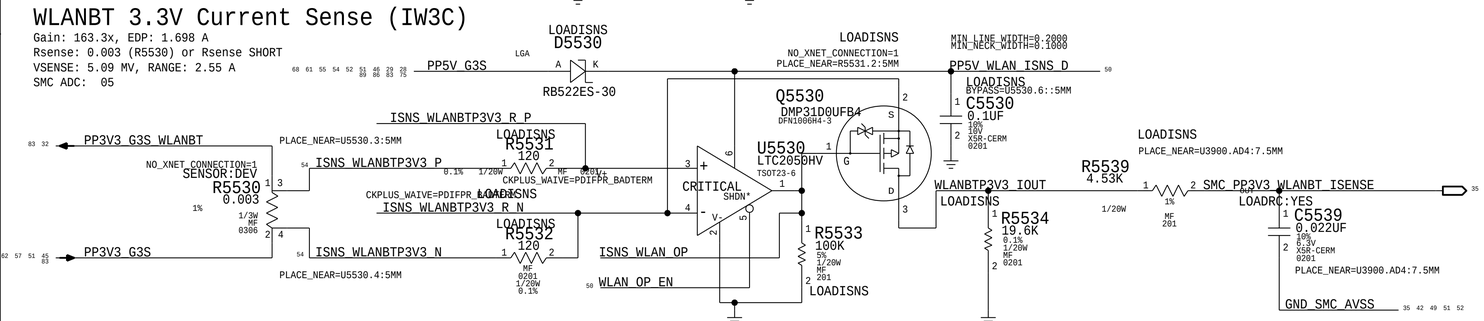

PART NUMBER	QTY	DESCRIPTION	REFERENCE DES	CRITICAL	BOM OPTION
117S0008	4	RES,MTL FLIM,100K,1/16W,0201,SMD,R	5518,R5568,R554A,C5539		LOADRC:NO

CPU Core Current Sense (ICAC)

Gain: 104.38x, EDP: 64 A
Rsense: 2x of 0.00075 (R7310, R7320), Rsum: 0.000375
Vsense: 24 MV, Range: 76.64 A
PMU AMUX: B7

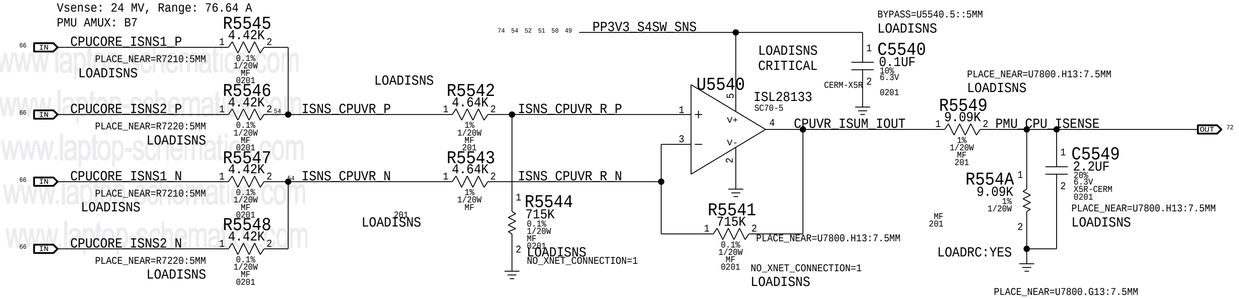

CPU Core Voltage Sense (VCAC)

PMU AMUX: B4

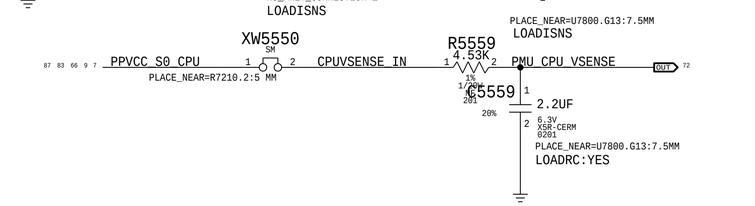

CPU GT+GTX Current Sense (ICGC)

Gain: 104.38x, EDP: 64 A
Rsense: 2x of 0.00075 (R7410, R7420), Rsum: 0.000375
Vsense: 24 mV, Range: 76.64 A
PMU AMUX: B6

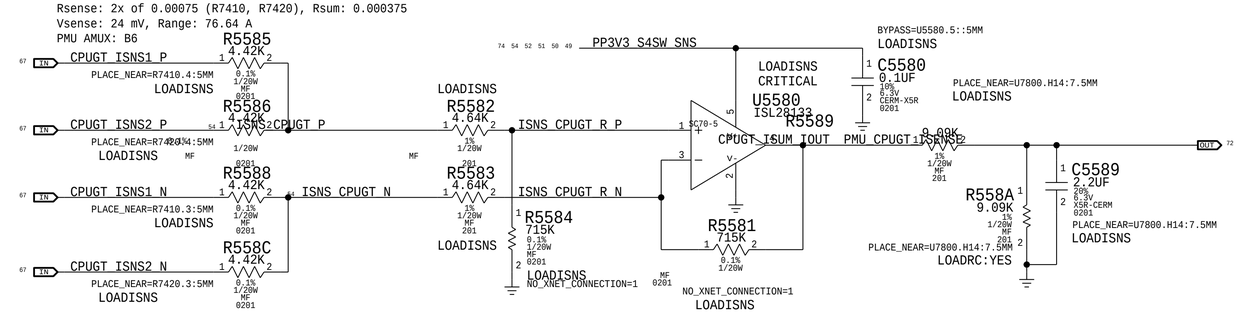

CPU GT Voltage Sense (VCGC)

PMU AMUX: B5

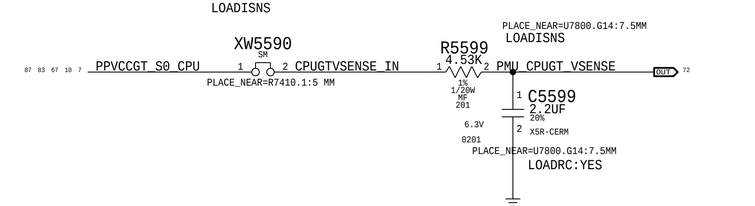

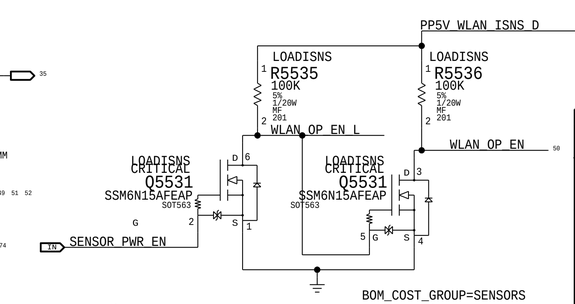

PAGE TITLE: POWER SENSORS LOAD SIDE

Apple Inc.

DRAWING NUMBER: 051-04273 SIZE: D
REVISION: 4.0.0
BRANCH: evt-1
PAGE: 55 OF 500
SHEET: 50 OF 98

NOTICE OF PROPRIETARY PROPERTY:
THE INFORMATION CONTAINED HEREIN IS THE PROPRIETARY PROPERTY OF APPLE INC.
THE POSESSOR AGREES TO THE FOLLOWING:
I TO MAINTAIN THIS DOCUMENT IN CONFIDENCE
II NOT TO REPRODUCE OR COPY IT
III NOT TO REVEAL OR PUBLISH IT IN WHOLE OR PART
IV ALL RIGHTS RESERVED

www.laptop-schematics.com

Thunderbolt TBD Left Current Sense (IULC)

Gain: 200x. EDP: 0.7 A
Rsense: 0.025 (R5640) or SHORT
Vsense: 17.5 mV, Range: 0.66 A
EADC1: CH7

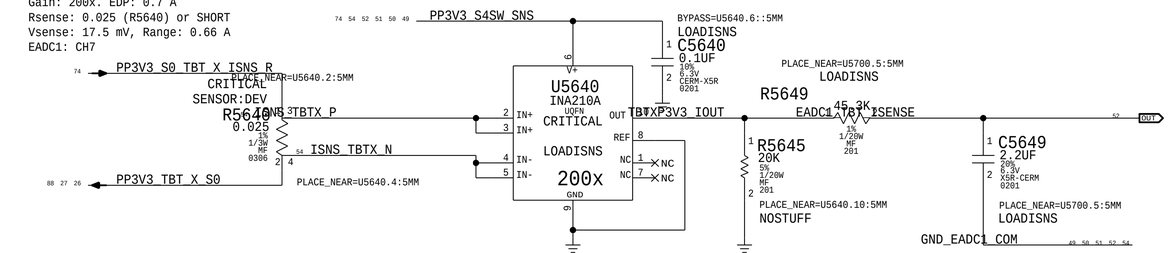

CPU Reg. ALSCAM, LCD 5V Current Sense (IC5C)

Gain: 200x. EDP: 0.42+0.1+0.1 A
Rsense: 0.025 (R5660) or SHORT
Vsense: 15.5 mV, Range: 0.60 A
PMU AMUX: A7

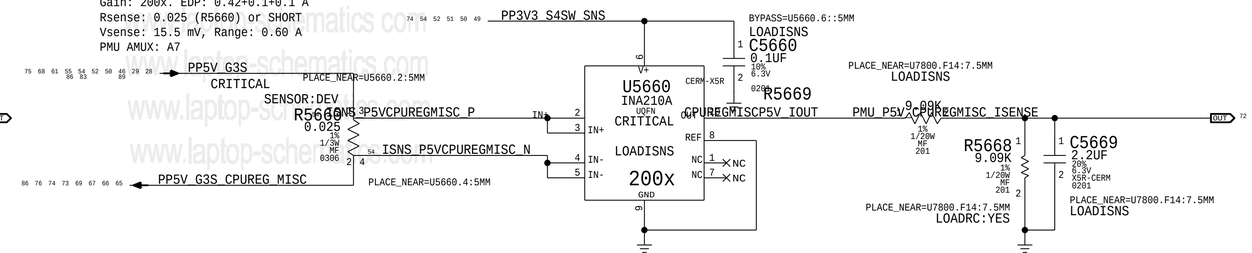

LCD Panel 3.3V Current Sense (ILDC)

Gain: 200x. EDP: 1 A
RSENSE: 0.01 (R8520) or SHORT
Vsense: 10 mV, Range: 1.5 A
EADC2: CH0

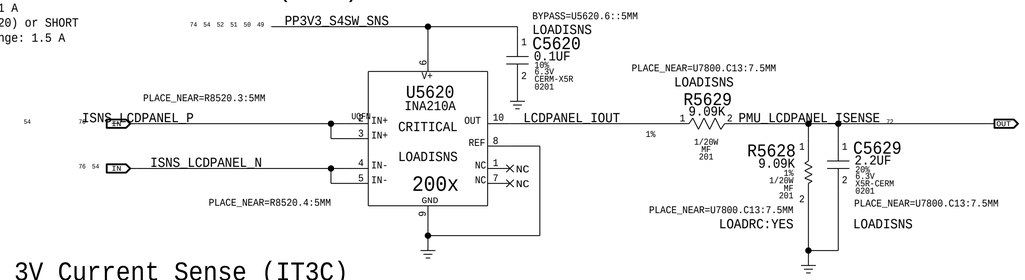

LPDDR 1.8V Current Sense (IM1C)

Gain: 200x. EDP: 0.45 A
Rsense: 0.005 (R5630) or SHORT
Vsense: 2.25 mV, Range: 3.3 A
EADC2: CH1

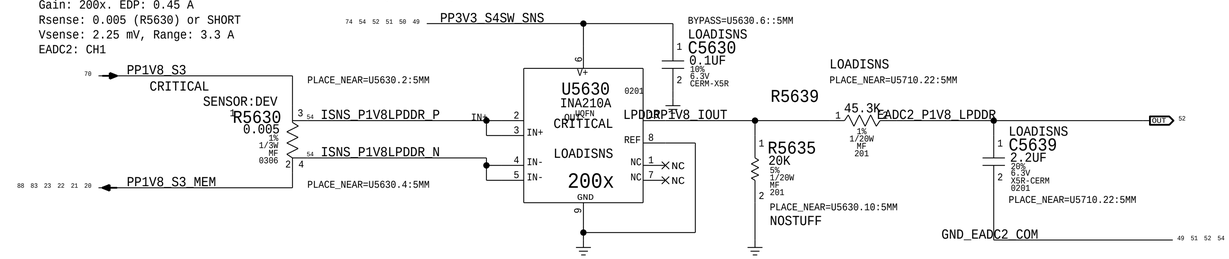

Trackpad 3V Current Sense (IT3C)

Gain: 200x, EDP: 0.05 A
Rsense: 0.1 (R5650) or SHORT
Vsense: 5 mV, Range: 0.17 A
EADC2: CH1

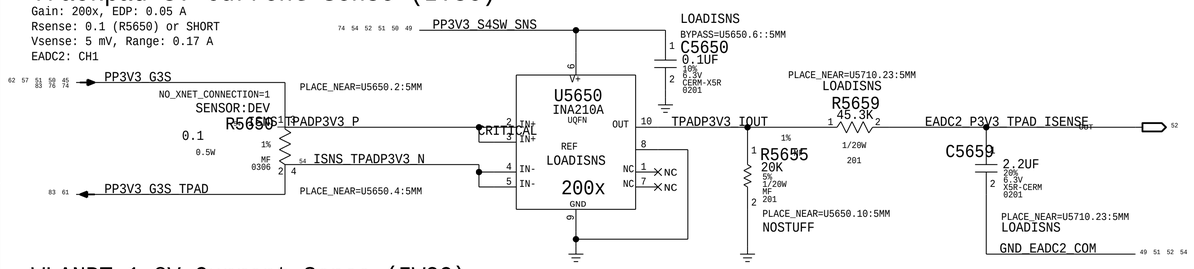

1.8V Standby Current Sense

Gain: None. EDP: 0.65 A
Rsense: 0.025 (R56B0) or SHORT
Vsense: 16.25 mV

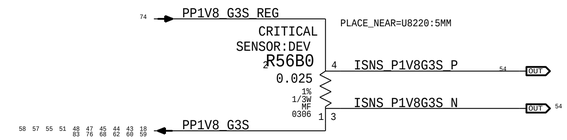

WLANBT 1.8V Current Sense (IW2C)

Gain: 200x, EDP: 0.0085 A
Rsense: 1 (R5680)
Vsense: 8.5 mV, Range: 0.013 A
SMC ADC: 06

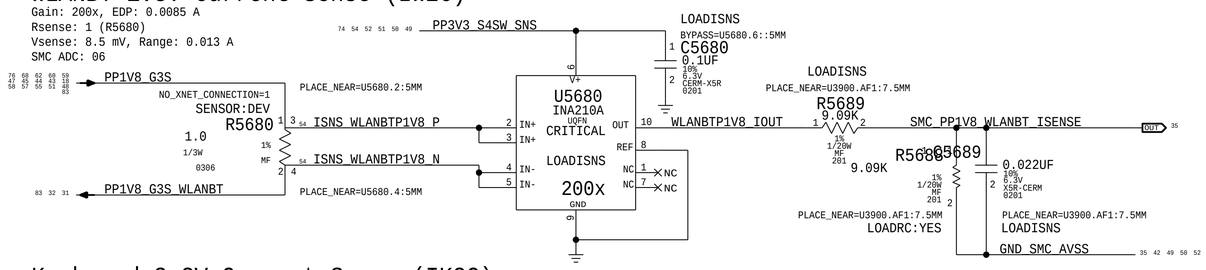

UNUSED ADC CHANNELS

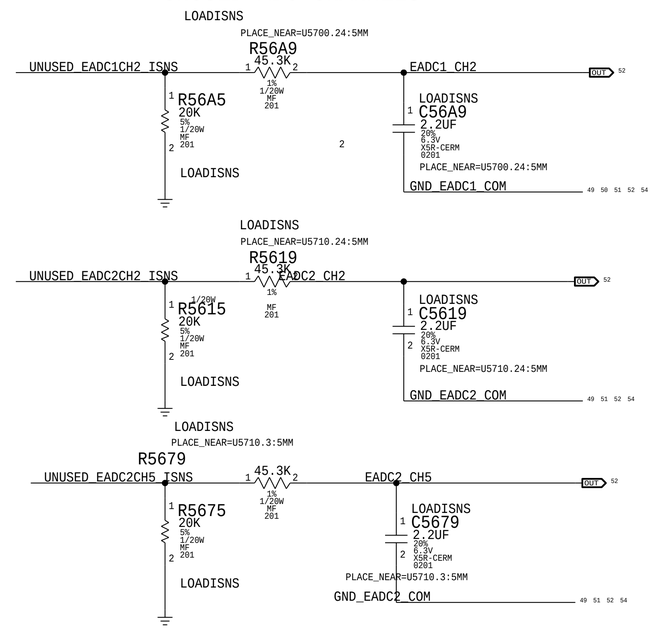

Keyboard 3.3V Current Sense (IK3C)

Gain: 200x, EDP: 0.043 A
Rsense: 0.1 (R5690)
Vsense: 4.3 mV, Range: 0.17 A
EADC1 CH6

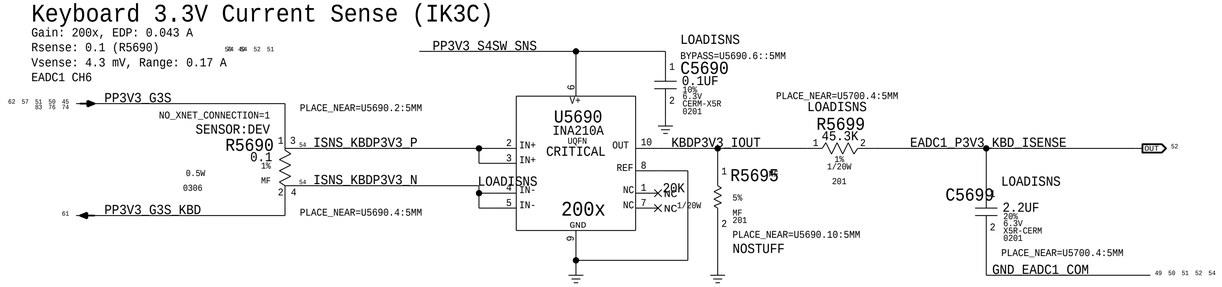

PART NUMBER	QTY	DESCRIPTION	REFERENCE DES	CRITICAL	BOM OPTION
117S0008	2	RES,MTL FLIM,100K,1/16W,0201,SMD,LF	R5628,R5688		LOADRC:NO

BOM_COST_GROUP=SENSORS

PAGE TITLE
POWER SENSORS EXTENDED

Apple Inc.

DRAWING NUMBER 051-04273
SIZE D
REVISION 4.0.0
BRANCH evt-1
PAGE 56 OF 500
SHEET 51 OF 98

NOTICE OF PROPRIETARY PROPERTY:
THE INFORMATION CONTAINED HEREIN IS THE PROPRIETARY PROPERTY OF APPLE INC.
THE POSESSOR AGREES TO THE FOLLOWING:
I TO MAINTAIN THIS DOCUMENT IN CONFIDENCE
II NOT TO REPRODUCE OR COPY IT
III NOT TO REVEAL OR PUBLISH IT IN WHOLE OR PART
IV ALL RIGHTS RESERVED

Calpe 3.3V Input Current Left (IP3C)

Gain: 100x. EDP: 10.224 A
Rsense: 0.002 (R5780)
Vsense: 20.448 mV, Range: 12.5 A
EADC1: CH7

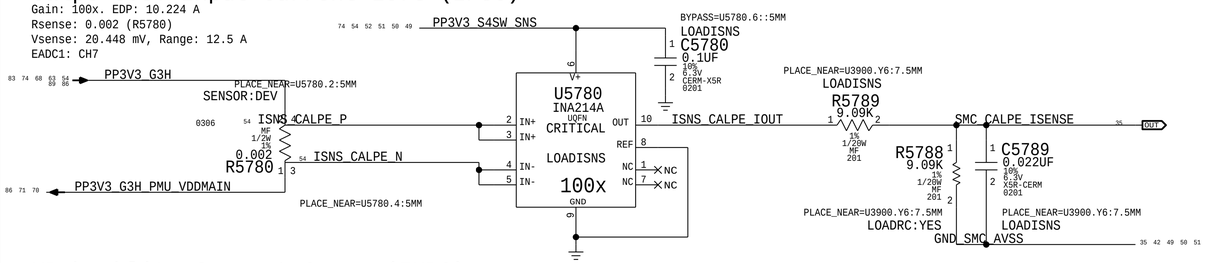

KB backlite Current Sense (IKBC)

Gain: 200x, EDP: 0.17 A
Rsense: 0.05 (R5730)
Vsense: 8.5 mV, Range: 0.33 A
EADC2: CH3

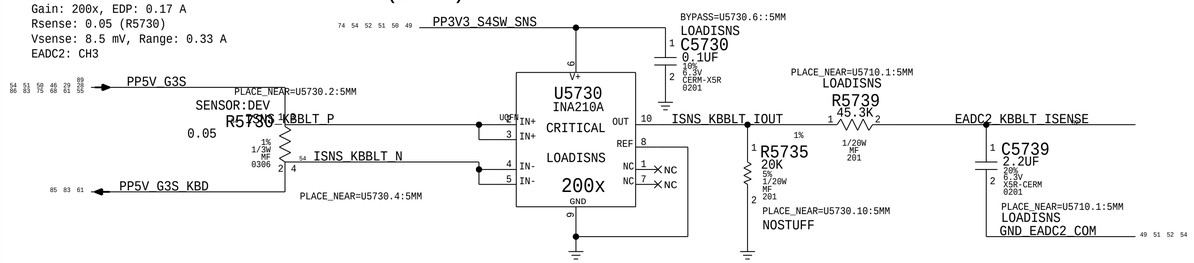

CPU SA Current Sense (ICSC)

Gain: 100X, EDP: 9.5 A
Rsense: 0.002 (R7270)
Vsense: 19 mV, Range: 15 A
PMU AMUX: B1

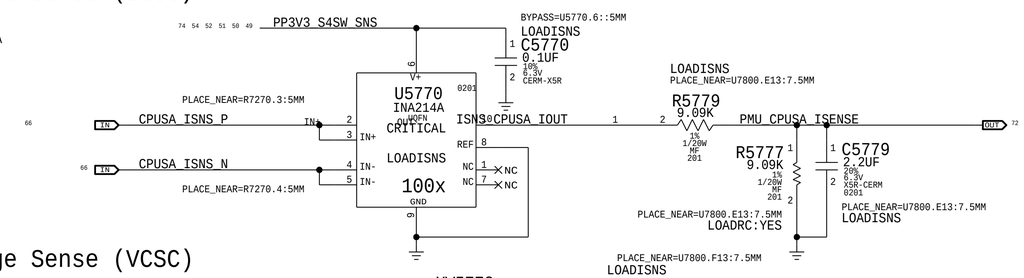

CPU SA Voltage Sense (VCSC)

PMU AMUX: B3

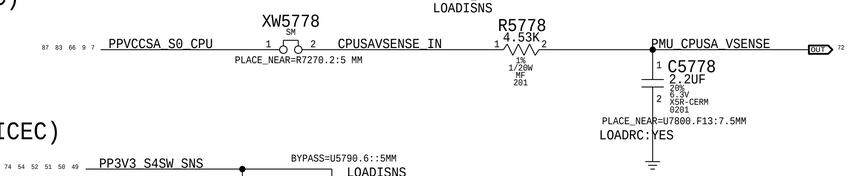

CPU EDRAM Current Sense (ICEC)

Gain: 200x, EDP: 6.2 A
Rsense: 0.002 (R7702) or SHORT
Vsense: 12.4 mV, Range: 7.5 A
PMU AMUX: A2

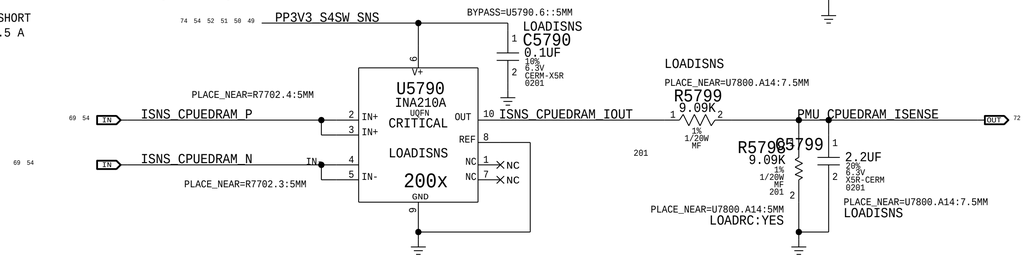

EADC1

(Write: 0x10 Read: 0x11)

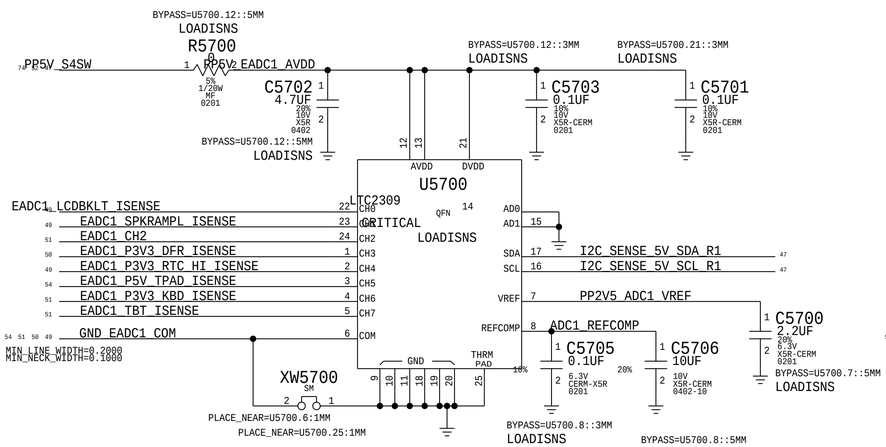

EADC2

(Write: 0x12 Read: 0x13)

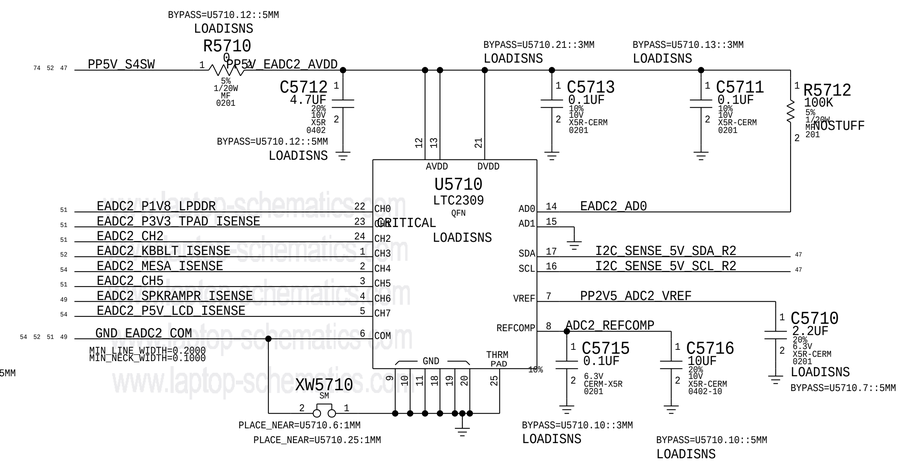

PART NUMBER	QTY	DESCRIPTION	REFERENCE DES	CRITICAL	BOM OPTION
117S0008	2	RES,MTL FLIM,100K,1/16W,0201,SMD,LF	R5768,R5777,R5788,R5798,C5778		LOADRC:NO

BOM_COST_GROUP=SENSORS

PAGE TITLE: POWER SENSORS EXTENDED 2

Apple Inc.

DRAWING NUMBER: 051-04273 SIZE: D
REVISION: 4.0.0
BRANCH: evt-1
PAGE: 57 OF 500
SHEET: 52 OF 98

NOTICE OF PROPRIETARY PROPERTY:
THE INFORMATION CONTAINED HEREIN IS THE PROPRIETARY PROPERTY OF APPLE INC.
THE POSESSOR AGREES TO THE FOLLOWING:
I TO MAINTAIN THIS DOCUMENT IN CONFIDENCE
II NOT TO REPRODUCE OR COPY IT
III NOT TO REVEAL OR PUBLISH IT IN WHOLE OR PART
IV ALL RIGHTS RESERVED

Thermal Sensor A:
TBT Die, NAND, WIFI, I/O proximity

I2C Write: 0x90, I2C Read: 0x91

TBT Die Thermal Diode (TBA)

Placement Note:
The P leg connects to THERMDA of TBT die.
The N leg connectd to GND pin close to THERMDA.

WIFI Proximity (TW0P)

Placement Note:
BOTTOM side of WIFI/BT module

NAND Proximity #1 (TH0b)

Placement note:
BOTTOM side between NAND devices

NAND Proximity #2 (TH0a)

Placement note:
TOP side between NAND devices

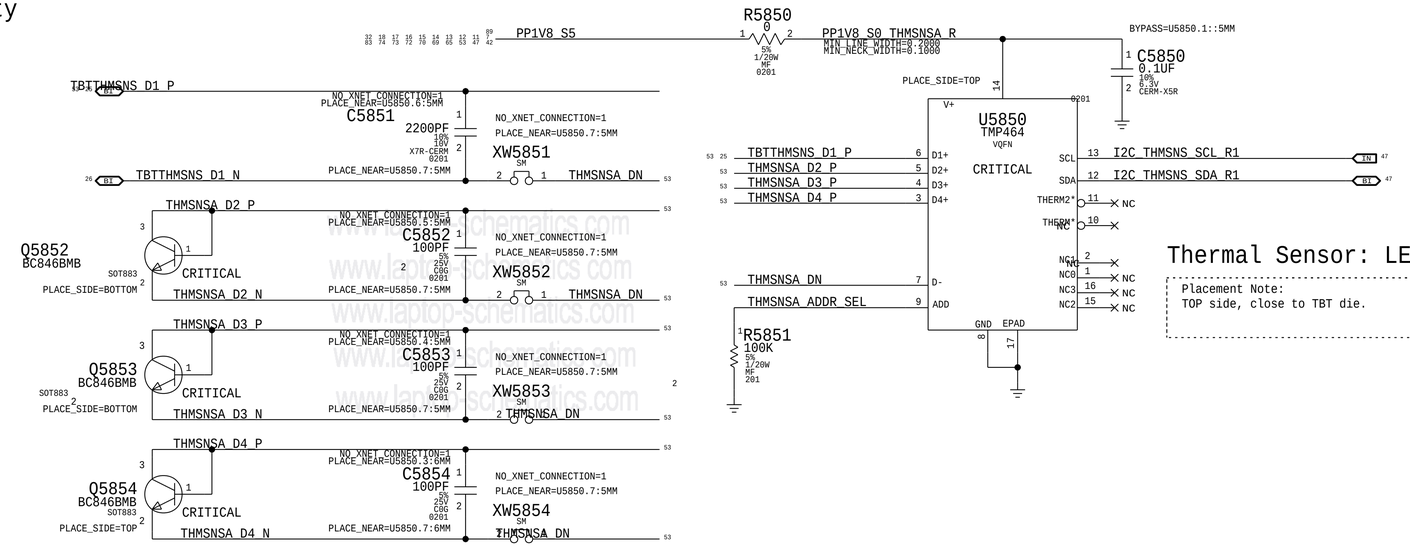

Thermal Sensor: LEFT IO proximity (TI0p)

Placement Note:
TOP side, close to TBT die.

Thermal Sensor B
Fin Stack, CPU Proximity, Memory Proximity, and CPU VR

I2C Write: 0x92, I2C Read: 0x93

Thermal Diode: Ambient (TA0p)

Placement Note:
Airflow thermal indicator, TOP side.

CPU Proximity (TC0P)

Placement Note:
TOP side of CPU.

Memory Proximity (TM0P)

Placement Note:
TOP side between main memory devices.

Memory Proximity (TM1P)

Placement Note:
BOTTOM side between main memory devices.

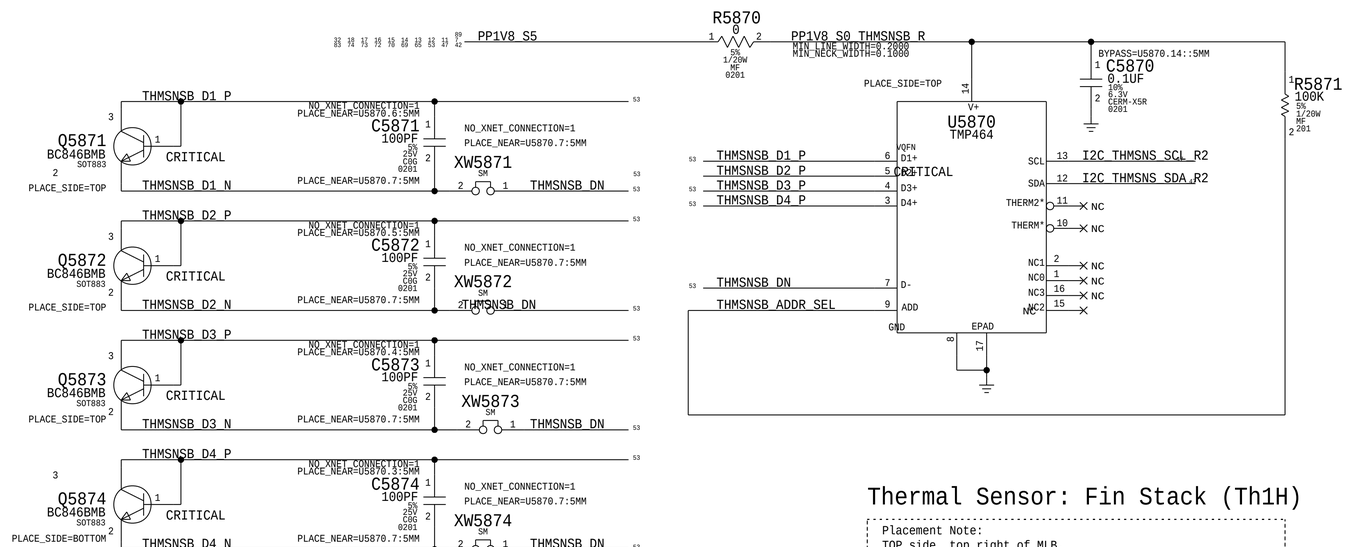

Thermal Sensor: Fin Stack (Th1H)

Placement Note:
TOP side, top right of MLB.

BOM_COST_GROUP=SENSORS

PAGE TITLE
THERMAL SENSORS

Apple Inc.

DRAWING NUMBER 051-04273 SIZE D
REVISION 4.0.0
BRANCH evt-1
PAGE 58 OF 500
SHEET 53 OF 98

NOTICE OF PROPRIETARY PROPERTY:
THE INFORMATION CONTAINED HEREIN IS THE PROPRIETARY PROPERTY OF APPLE INC.
THE POSESSOR AGREES TO THE FOLLOWING:
I TO MAINTAIN THIS DOCUMENT IN CONFIDENCE
II NOT TO REPRODUCE OR COPY IT
III NOT TO REVEAL OR PUBLISH IT IN WHOLE OR PART
IV ALL RIGHTS RESERVED

Trackpad 5V Current Sense (IT5C)

Gain: 200x, EDP: 0.0055 A
Rsense: 0.1 (R5940) or SHORT
Vsense: 0.55 mV, Range: 0.17 A
EADC1: CH6

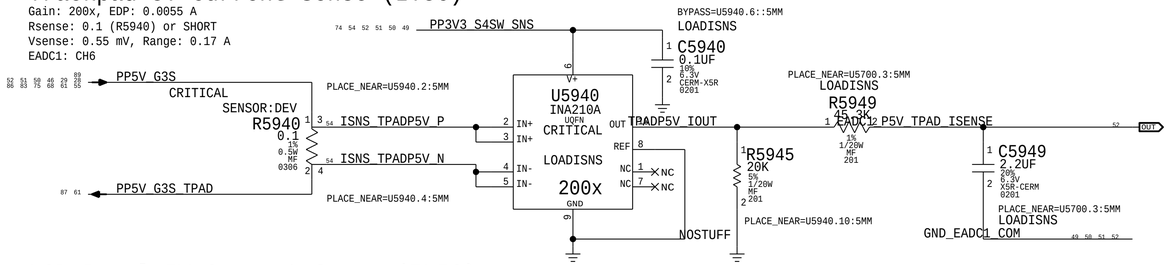

LCD Panel 5V Current Sense (IL5C)

Gain: 200x, EDP: 0.1 A
Rsense: 0.1 (R8521) or SHORT
Vsense: 10 mV, Range: 0.17 A
EADC1: CH7

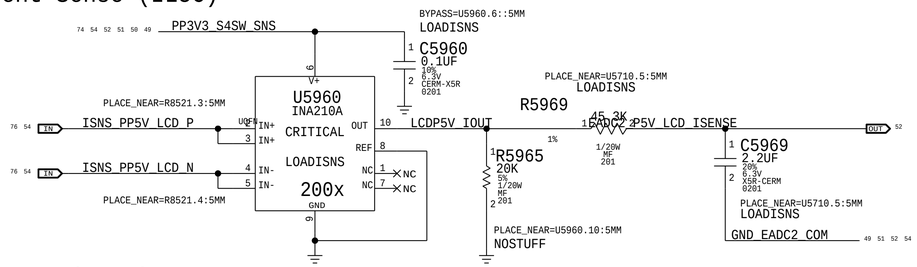

Ocarina Current Sense (IHCC)

Gain: 100x, EDP: 2.139 A
Rsense: 0.01 (R5920) or SHORT
Vsense: 21.4 mV, Range: 3.0 A
MUX: A5

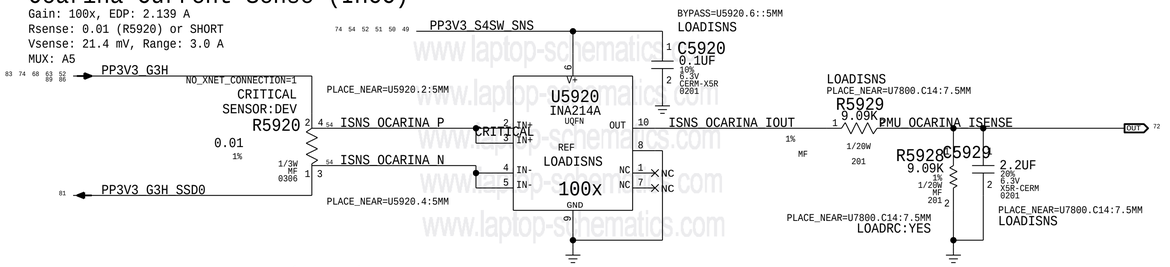

MESA Current Sense (IIDC)

Gain: 200x, EDP: 0.176 A
Rsense: 0.050 (R5530) or SHORT
Vsense: 8.8 mV, Range: 0.33 A
EADC2: CH4

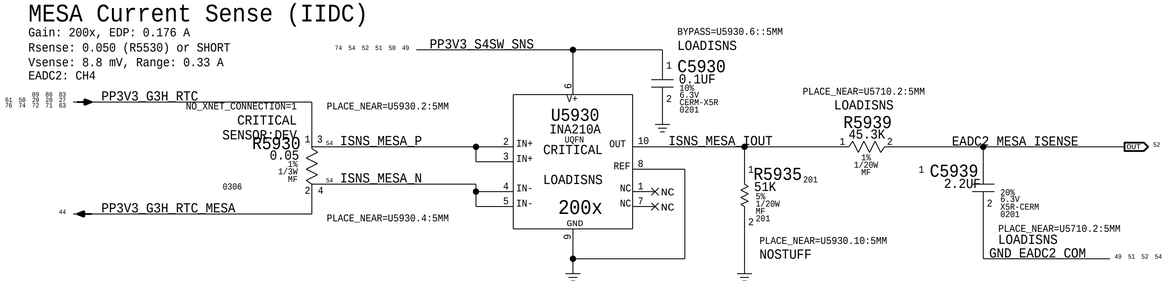

Probe Points for Power Validation

Net	Refdes	Side	Near
ISNS_HS_CPU_P	TP5901	TOP	R5400:5MM
ISNS_HS_CPU_N	TP5902	TOP	R5400:5MM
ISNS_HS_OTHER5V_P	TP5903	TOP	R5410:5MM
ISNS_HS_OTHER5V_N	TP5904	TOP	R5410:5MM
ISNS_HS_OTHER3V3_P	TP5905	TOP	R5440:5MM
ISNS_HS_OTHER3V3_N	TP5906	TOP	R5440:5MM
ISNS_HS_3V3RTC_P	TP5907	TOP	R5420:5MM
ISNS_HS_3V3RTC_N	TP5908	TOP	R5420:5MM
ISNS_SSDNAND_P	TP5909	TOP	R5460:5MM
ISNS_SSDNAND_N	TP5910	TOP	R5460:5MM
ISNS_LCDBKLT_P	TP5911	TOP	R8400:30MM
ISNS_LCDBKLT_N	TP5912	TOP	R8400:30MM
ISNS_SPKRAMP_LEFT_P	TP5913	TOP	R54A0:5MM
ISNS_SPKRAMP_LEFT_N	TP5914	TOP	R54A0:5MM
ISNS_SPKRAMP_RIGHT_P	TP5915	TOP	R54B0:5MM
ISNS_SPKRAMP_RIGHT_N	TP5916	TOP	R54B0:5MM
CHGR_CSI_R_P	TP5917	TOP	R7020:5MM
CHGR_CSI_R_N	TP5918	TOP	R7020:5MM
CHGR_AMON	TP5919	TOP	
	TP5981	TOP	TP5919:5MM
CHGR_CSO_R_P	TP5920	TOP	R7060:30MM
CHGR_CSO_R_N	TP5921	TOP	R7060:30MM
CHGR_BMON	TP5922	TOP	
	TP5982	TOP	TP5922:5MM
PVCCIOS0_CS_P	TP5923	TOP	R8102:5MM
PVCCIOS0_CS_N	TP5924	TOP	R8102:5MM
ISNS_CPUDDR_P	TP5925	TOP	R8118:5MM
ISNS_CPUDDR_N	TP5926	TOP	R8118:5MM
ISNS_CPUVDDQ_P	TP5927	TOP	R5510:5MM
ISNS_CPUVDDQ_N	TP5928	TOP	R5510:5MM
ISNS_DFR3V3_P	TP5929	TOP	R5520:5MM
ISNS_DFR3V3_N	TP5930	TOP	R5520:5MM
ISNS_WLANBTP3V3_P	TP5931	TOP	R5530:5MM
ISNS_WLANBTP3V3_N	TP5932	TOP	R5530:5MM
ISNS_CPUVR_P	TP5933	TOP	R5542:30MM
ISNS_CPUVR_N	TP5934	TOP	R5543:30MM
ISNS_CPUGT_P	TP5935	TOP	R5582:10MM
ISNS_CPUGT_N	TP5936	TOP	R5583:10MM
ISNS_TBTX_P	TP5937	TOP	R5640:5MM
ISNS_TBTX_N	TP5938	TOP	R5640:5MM
ISNS_LCDPANEL_P	TP5939	TOP	R8520:5MM
ISNS_LCDPANEL_N	TP5940	TOP	R8520:5MM
ISNS_TPADP3V3_P	TP5941	TOP	R5650:10MM
ISNS_TPADP3V3_N	TP5942	TOP	R5650:10MM
ISNS_WLANBTP1V8_P	TP5943	TOP	R5680:5MM
ISNS_WLANBTP1V8_N	TP5944	TOP	R5680:5MM
ISNS_CALPE_P	TP5945	TOP	R5780:5MM
ISNS_CALPE_N	TP5946	TOP	R5780:5MM
ISNS_KBBLT_P	TP5947	TOP	R5730:5MM
ISNS_KBBLT_N	TP5948	TOP	R5730:5MM
CPUSA_ISNS_R_P	TP5949	TOP	R7274:5MM
CPUSA_ISNS_R_N	TP5950	TOP	R7272:5MM
ISNS_CPUEDRAM_P	TP5951	TOP	R7702:5MM
ISNS_CPUEDRAM_N	TP5952	TOP	R7702:5MM
ISNS_TPADP5V_P	TP5953	TOP	R5940:10MM
ISNS_TPADP5V_N	TP5954	TOP	R5940:10MM
ISNS_PP5V_LCD_P	TP5955	TOP	R8521:5MM
ISNS_PP5V_LCD_N	TP5956	TOP	R8521:5MM
ISNS_OCARINA_P	TP5957	TOP	R5920:5MM
ISNS_OCARINA_N	TP5958	TOP	R5920:5MM
ISNS_MESA_P	TP5959	TOP	R5930:5MM
ISNS_MESA_N	TP5960	TOP	R5930:5MM
PPVPCORE_S5	TP5961	TOP	L7820:5MM
PVCC_FB_P	TP5962	TOP	R0850:10MM
PP1V_PRIM	TP5963	TOP	L821:5MM
P1VPRIM_FB_R	TP5964	TOP	R0853:10MM
ISNS_KBDP3V3_P	TP5965	TOP	R5690:5MM
ISNS_KBDP3V3_N	TP5966	TOP	R5690:5MM
ISNS_P5VCPUREGMISC_P	TP5967	TOP	R5660:5MM
ISNS_P5VCPUREGMISC_N	TP5968	TOP	R5660:5MM
ISNS_P1V8LPDDR_P	TP5969	TOP	R5630:5MM
ISNS_P1V8LPDDR_N	TP5970	TOP	R5630:5MM
ISNS_P1V8G3S_P	TP5971	TOP	R56B0:5MM
ISNS_P1V8G3S_N	TP5972	TOP	R56B0:5MM
	TP5983	TOP	
	TP5984	TOP	
	TP5985	TOP	
	TP5986	TOP	

BOM_COST_GROUP=SENSORS

PART NUMBER	QTY	DESCRIPTION	REFERENCE DES	CRITICAL	BOM OPTION
117S0008	2	RES,MTL FLIM,100K,1/16W,0201,SMD,LF	R5928		LOADRC:NO

PAGE TITLE: POWER SENSORS EXTENDED 3

Apple Inc.

DRAWING NUMBER: 051-04273
SIZE: D
REVISION: 4.0.0
BRANCH: evt-1
PAGE: 59 OF 500
SHEET: 54 OF 98

NOTICE OF PROPRIETARY PROPERTY:
THE INFORMATION CONTAINED HEREIN IS THE PROPRIETARY PROPERTY OF APPLE INC.
THE POSESSOR AGREES TO THE FOLLOWING:
I TO MAINTAIN THIS DOCUMENT IN CONFIDENCE
II NOT TO REPRODUCE OR COPY IT
III NOT TO REVEAL OR PUBLISH IT IN WHOLE OR PART
IV ALL RIGHTS RESERVED

FAN CONTROL

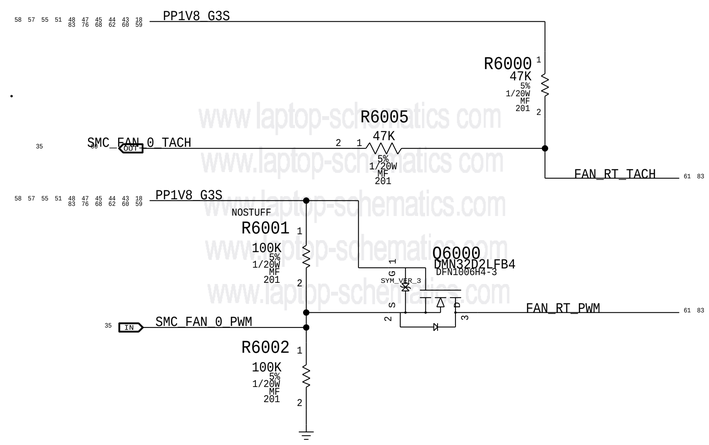

FOR DEBUG FAN POWER

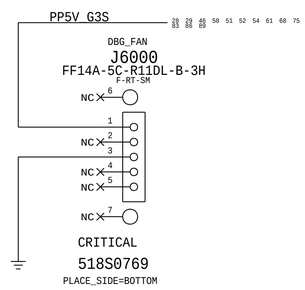

BOM_COST_GROUP=FAN

SYNC_MASTER=J213_KEI SYNC_DATE=05/31/2018

PAGE TITLE
FANS/SMC/AMUX SUPPORT

Apple Inc.

DRAWING NUMBER 051-04273 SIZE D

REVISION 4.0.0

BRANCH evt-1

PAGE 60 OF 500

SHEET 55 OF 98

NOTICE OF PROPRIETARY PROPERTY:
THE INFORMATION CONTAINED HEREIN IS THE PROPRIETARY PROPERTY OF APPLE INC.
THE POSESSOR AGREES TO THE FOLLOWING:
I TO MAINTAIN THIS DOCUMENT IN CONFIDENCE
II NOT TO REPRODUCE OR COPY IT
III NOT TO REVEAL OR PUBLISH IT IN WHOLE OR PART
IV ALL RIGHTS RESERVED

BOM_COST_GROUP=AUDIO

SYNC_MASTER=J213_MLB_0P158 SYNC_DATE=05/29/2018

PAGE TITLE

AUDIO PLACEHOLDER

Apple Inc.

DRAWING NUMBER 051-04273 SIZE D

REVISION 4.0.0

BRANCH evt-1

PAGE 62 OF 500

SHEET 56 OF 98

NOTICE OF PROPRIETARY PROPERTY:

THE INFORMATION CONTAINED HEREIN IS THE PROPRIETARY PROPERTY OF APPLE INC.
THE POSESSOR AGREES TO THE FOLLOWING:

I TO MAINTAIN THIS DOCUMENT IN CONFIDENCE
II NOT TO REPRODUCE OR COPY IT
III NOT TO REVEAL OR PUBLISH IT IN WHOLE OR PART
IV ALL RIGHTS RESERVED

AUDIO JACK CODEC I2C ADDRESS		
AD1	AD0	ADDRESS
GND	GND	0x48 <--
GND	1.8V	0x49
1.8V	GND	0x4A
1.8V	1.8V	0x4B

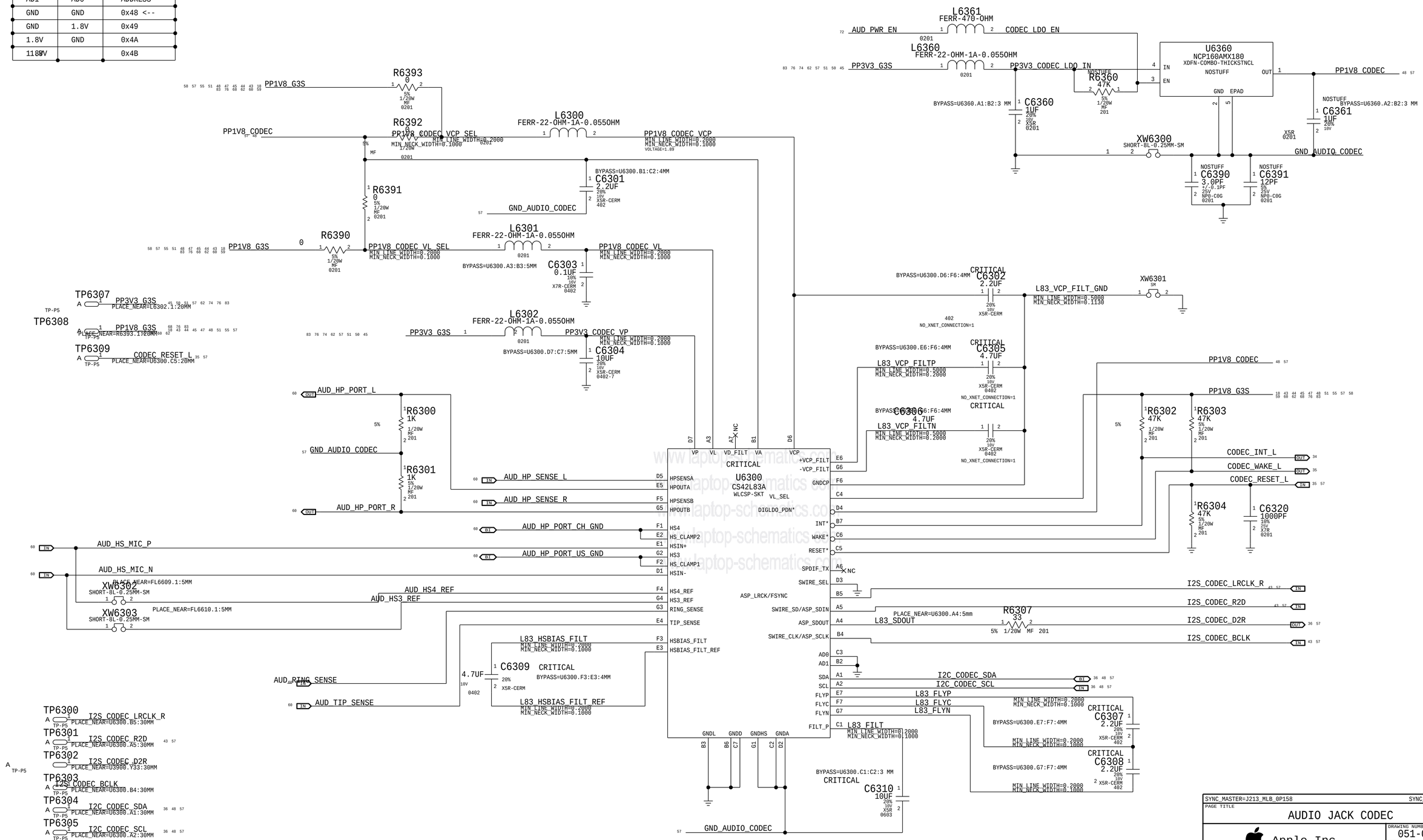

SYNC_MASTER=J213_MLB_0P15B SYNC_DATE=05/29/2018

PAGE TITLE: AUDIO JACK CODEC

Apple Inc.

DRAWING NUMBER: 051-04273 SIZE: D

REVISION: 4.0.0

BRANCH: evt-1

PAGE: 63 OF 500

SHEET: 57 OF 98

NOTICE OF PROPRIETARY PROPERTY:
THE INFORMATION CONTAINED HEREIN IS THE PROPRIETARY PROPERTY OF APPLE INC.
THE POSESSOR AGREES TO THE FOLLOWING:
I TO MAINTAIN THIS DOCUMENT IN CONFIDENCE
II NOT TO REPRODUCE OR COPY IT
III NOT TO REVEAL OR PUBLISH IT IN WHOLE OR PART
IV ALL RIGHTS RESERVED

2X MONO SPEAKER LEFT AMPLIFIERS

APN: 353S01252
GAIN: 0DBFS = xxVRMS

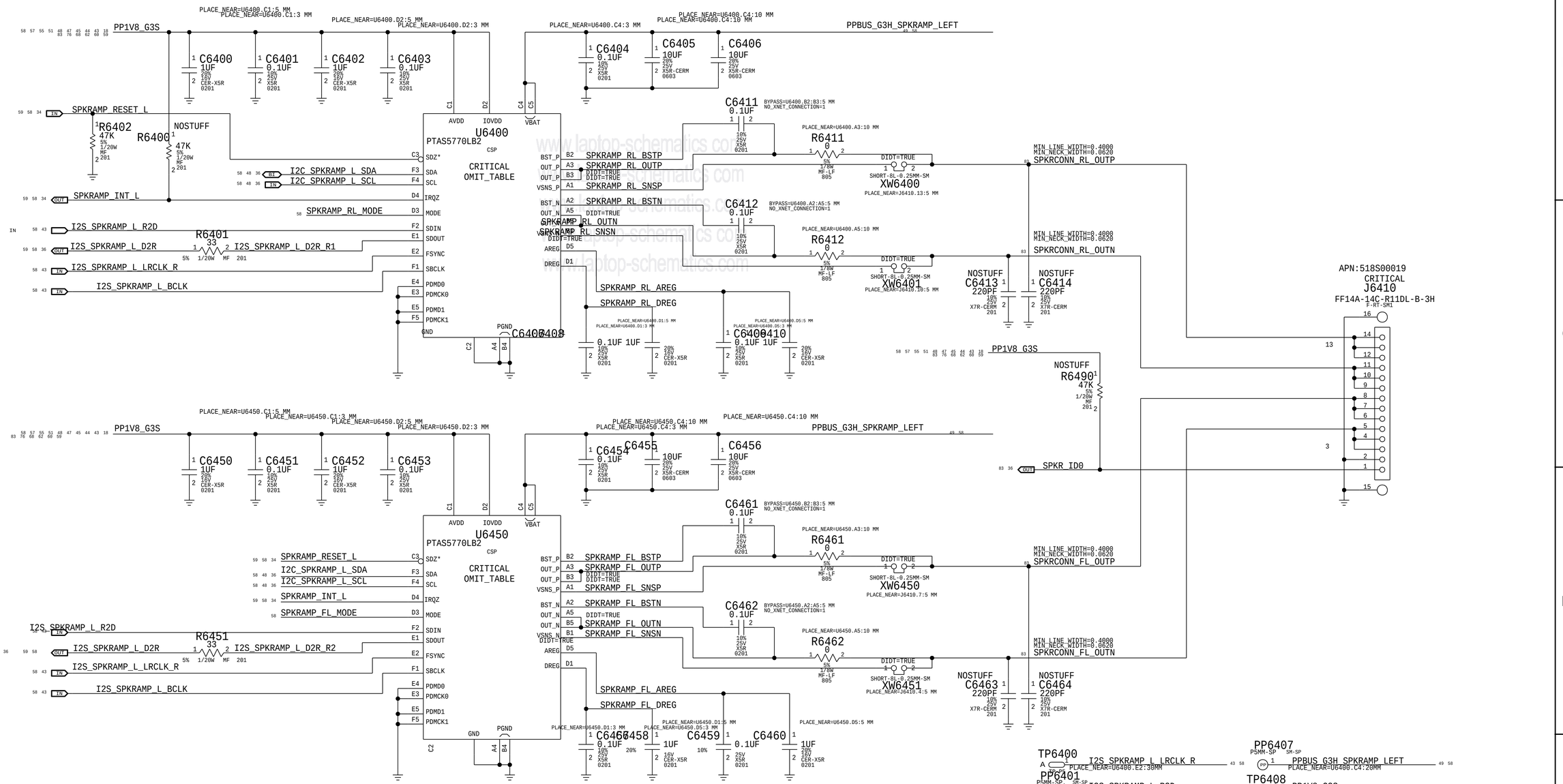

MODE PIN	I2C ADDR	CHANNEL
GND	0x31	REAR LEFT
470 to GND	0x32	FRONT LEFT
470 to IOVDD	0x33	REAR RIGHT
2k2 to GND	0x34	FRONT RIGHT
2k2 to IOVDD	0x35	
10k to GND	0x36	
10k to IOVDD	0x37	
47k to IOVDD	0x38	

SYNC_MASTER=J213_TROY SYNC_DATE=12/11/2018

PAGE TITLE
AUDIO LEFT AMPLIFIERS

Apple Inc.

DRAWING NUMBER 051-04273 SIZE D
REVISION 4.0.0
BRANCH evt-1
PAGE 64 OF 500
SHEET 58 OF 98

NOTICE OF PROPRIETARY PROPERTY:
THE INFORMATION CONTAINED HEREIN IS THE PROPRIETARY PROPERTY OF APPLE INC.
THE POSESSOR AGREES TO THE FOLLOWING:
I TO MAINTAIN THIS DOCUMENT IN CONFIDENCE
II NOT TO REPRODUCE OR COPY IT
III NOT TO REVEAL OR PUBLISH IT IN WHOLE OR PART
IV ALL RIGHTS RESERVED

2X MONO SPEAKER RIGHT AMPLIFIERS

APN: 353S01252
GAIN: 0DBFS = xxVRMS

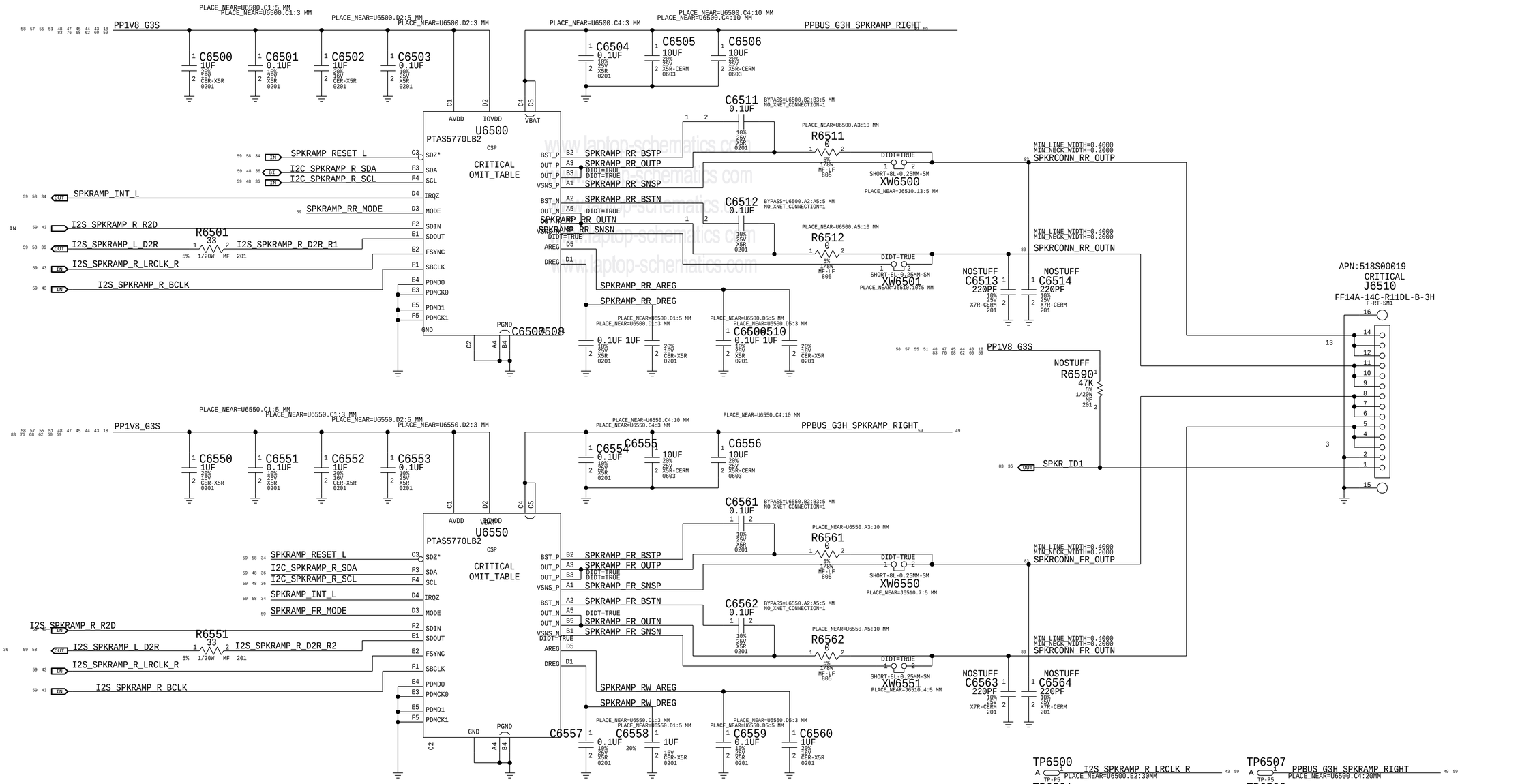

MODE PIN	I2C ADDR	CHANNEL
GND	0x31	LEFT REAR
470 to GND	0x32	LEFT FRONT
470 to IOVDD	0x33	RIGHT REAR
2k2 to GND	0x34	RIGHT FRONT
2k2 to IOVDD	0x35	
10k to GND	0x36	
10k to IOVDD	0x37	
47k to IOVDD	0x38	

www.laptop-schematics.com

SYNC_MASTER=J213_TROY SYNC_DATE=12/11/2018

PAGE TITLE
AUDIO RIGHT AMPLIFIERS

Apple Inc.

DRAWING NUMBER 051-04273
SIZE D
REVISION 4.0.0
BRANCH evt-1
PAGE 65 OF 500
SHEET 59 OF 98

NOTICE OF PROPRIETARY PROPERTY:
THE INFORMATION CONTAINED HEREIN IS THE PROPRIETARY PROPERTY OF APPLE INC.
THE POSESSOR AGREES TO THE FOLLOWING:
I TO MAINTAIN THIS DOCUMENT IN CONFIDENCE
II NOT TO REPRODUCE OR COPY IT
III NOT TO REVEAL OR PUBLISH IT IN WHOLE OR PART
IV ALL RIGHTS RESERVED

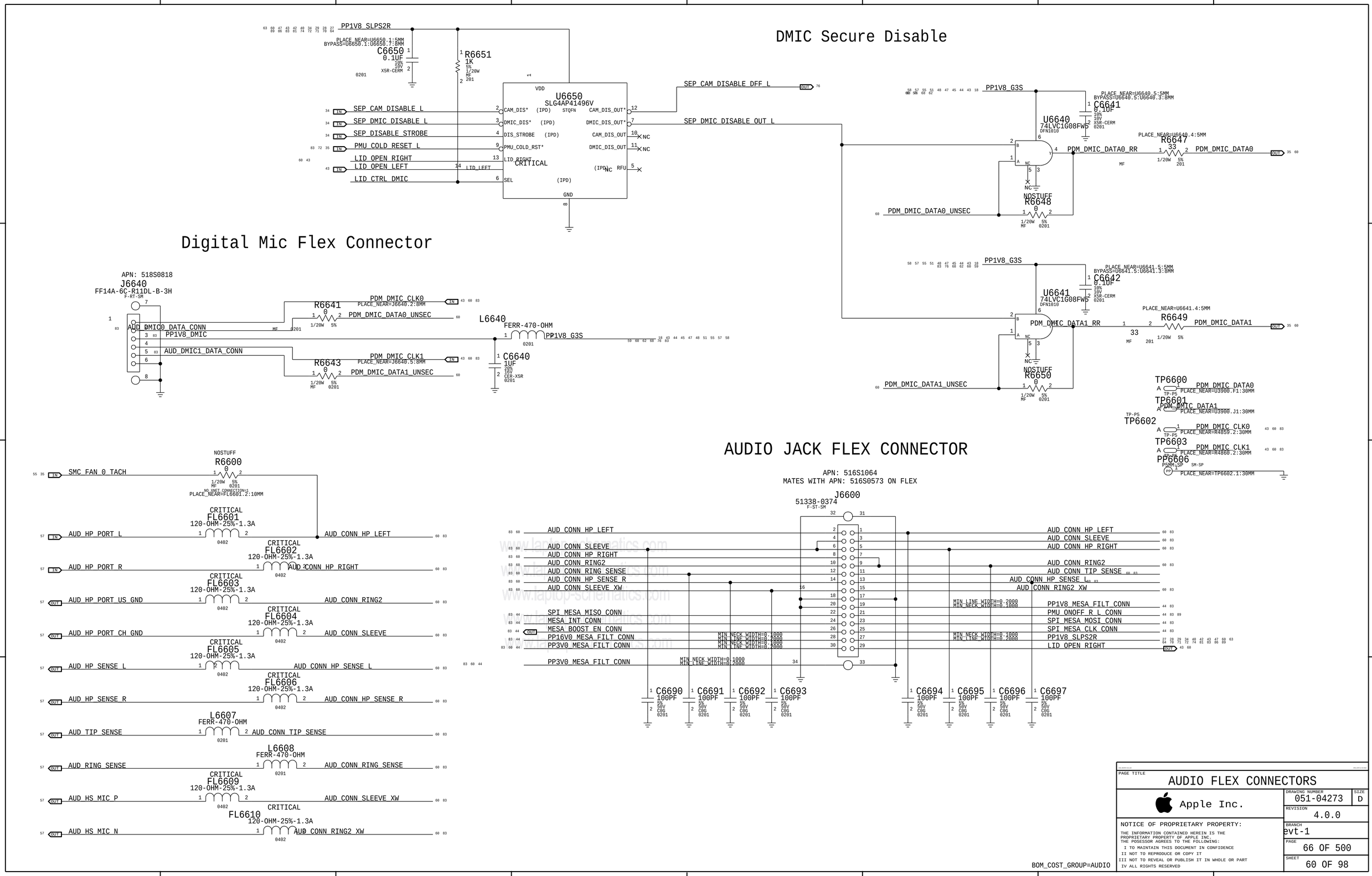
DMIC Secure Disable
PP1V8_SLPS2R
C6650 0.1UF 10% 10V X5R-CERM 0201
R6651 1K 5% 1/20W MF 201
U6650 SLG4AP41496V
VDD
CAM_DIS* (IPD) STQFN CAM_DIS_OUT*
DMIC_DIS* (IPD) DMIC_DIS_OUT*
DIS_STROBE (IPD) CAM_DIS_OUT
PMU_COLD_RST* DMIC_DIS_OUT
LID_RIGHT
LID_LEFT
SEL (IPD)
GND
CRITICAL
SEP_CAM_DISABLE_L
SEP_DMIC_DISABLE_L
SEP_DISABLE_STROBE
PMU_COLD_RESET_L
LID_OPEN_RIGHT
LID_OPEN_LEFT
LID_CTRL_DMIC
SEP_CAM_DISABLE_DFF_L
SEP_DMIC_DISABLE_OUT_L
U6640 74LVC1G08FW5 DFN1010
PP1V8_G3S
C6641 0.1UF 10% 10V X5R-CERM 0201
R6647 33 1/20W 5% 201 MF
PDM_DMIC_DATA0_RR
PDM_DMIC_DATA0
R6648 0 1/20W 5% 0201 MF
NOSTUFF
PDM_DMIC_DATA0_UNSEC
U6641 74LVC1G08FW5 DFN1010
C6642 0.1UF 10% 10V X5R-CERM 0201
R6649 33 1/20W 5% 201 MF
PDM_DMIC_DATA1_RR
PDM_DMIC_DATA1
R6650 0 1/20W 5% 0201 MF
PDM_DMIC_DATA1_UNSEC
Digital Mic Flex Connector
APN: 518S0818
J6640
FF14A-6C-R11DL-B-3H
F-RT-SM
AUD_DMIC0_DATA_CONN
PP1V8_DMIC
AUD_DMIC1_DATA_CONN
R6641 0 1/20W 5% 0201 MF
PDM_DMIC_CLK0
PDM_DMIC_DATA0_UNSEC
R6643 0 1/20W 5% 0201 MF
PDM_DMIC_CLK1
PDM_DMIC_DATA1_UNSEC
L6640 FERR-470-OHM 0201
C6640 1UF 20% 16V CER-X5R 0201
TP6600 PDM_DMIC_DATA0
TP6601 PDM_DMIC_DATA1
TP6602 PDM_DMIC_CLK0
TP6603 PDM_DMIC_CLK1
PP6606 PDMM_SP
AUDIO JACK FLEX CONNECTOR
APN: 516S1064
MATES WITH APN: 516S0573 ON FLEX
J6600
51338-0374
F-ST-SM
SMC_FAN_0_TACH
R6600 0 1/20W 5% 0201 MF
NOSTUFF
NO_PART_CONNECTIONS
FL6601 120-OHM-25%-1.3A 0402
AUD_HP_PORT_L
AUD_CONN_HP_LEFT
FL6602 120-OHM-25%-1.3A 0402
AUD_HP_PORT_R
AUD_CONN_HP_RIGHT
FL6603 120-OHM-25%-1.3A 0402
AUD_HP_PORT_US_GND
AUD_CONN_RING2
FL6604 120-OHM-25%-1.3A 0402
AUD_HP_PORT_CH_GND
AUD_CONN_SLEEVE
FL6605 120-OHM-25%-1.3A 0402
AUD_HP_SENSE_L
AUD_CONN_HP_SENSE_L
FL6606 120-OHM-25%-1.3A 0402
AUD_HP_SENSE_R
AUD_CONN_HP_SENSE_R
L6607 FERR-470-OHM 0201
AUD_TIP_SENSE
AUD_CONN_TIP_SENSE
L6608 FERR-470-OHM 0201
AUD_RING_SENSE
AUD_CONN_RING_SENSE
FL6609 120-OHM-25%-1.3A 0402
AUD_HS_MIC_P
AUD_CONN_SLEEVE_XW
FL6610 120-OHM-25%-1.3A 0402
AUD_HS_MIC_N
AUD_CONN_RING2_XW
AUD_CONN_HP_LEFT
AUD_CONN_SLEEVE
AUD_CONN_HP_RIGHT
AUD_CONN_RING2
AUD_CONN_RING_SENSE
AUD_CONN_HP_SENSE_R
AUD_CONN_SLEEVE_XW
SPI_MESA_MISO_CONN
MESA_INT_CONN
MESA_BOOST_EN_CONN
PP16V0_MESA_FILT_CONN
PP3V0_MESA_FILT_CONN
PP3V0_MESA_FILT_CONN
AUD_CONN_HP_LEFT
AUD_CONN_SLEEVE
AUD_CONN_HP_RIGHT
AUD_CONN_RING2
AUD_CONN_TIP_SENSE
AUD_CONN_HP_SENSE_L
AUD_CONN_RING2_XW
PP1V8_MESA_FILT_CONN
PMU_ONOFF_R_L_CONN
SPI_MESA_MOSI_CONN
SPI_MESA_CLK_CONN
PP1V8_SLPS2R
LID_OPEN_RIGHT
C6690 100PF 5% 50V C0G 0201
C6691 100PF 5% 50V C0G 0201
C6692 100PF 5% 50V C0G 0201
C6693 100PF 5% 50V C0G 0201
C6694 100PF 5% 50V C0G 0201
C6695 100PF 5% 50V C0G 0201
C6696 100PF 5% 50V C0G 0201
C6697 100PF 5% 50V C0G 0201
BOM_COST_GROUP=AUDIO
PAGE TITLE
AUDIO FLEX CONNECTORS
Apple Inc.
DRAWING NUMBER 051-04273
SIZE D
REVISION 4.0.0
BRANCH evt-1
PAGE 66 OF 500
SHEET 60 OF 98
NOTICE OF PROPRIETARY PROPERTY:
THE INFORMATION CONTAINED HEREIN IS THE PROPRIETARY PROPERTY OF APPLE INC.
THE POSESSOR AGREES TO THE FOLLOWING:
I TO MAINTAIN THIS DOCUMENT IN CONFIDENCE
II NOT TO REPRODUCE OR COPY IT
III NOT TO REVEAL OR PUBLISH IT IN WHOLE OR PART
IV ALL RIGHTS RESERVED

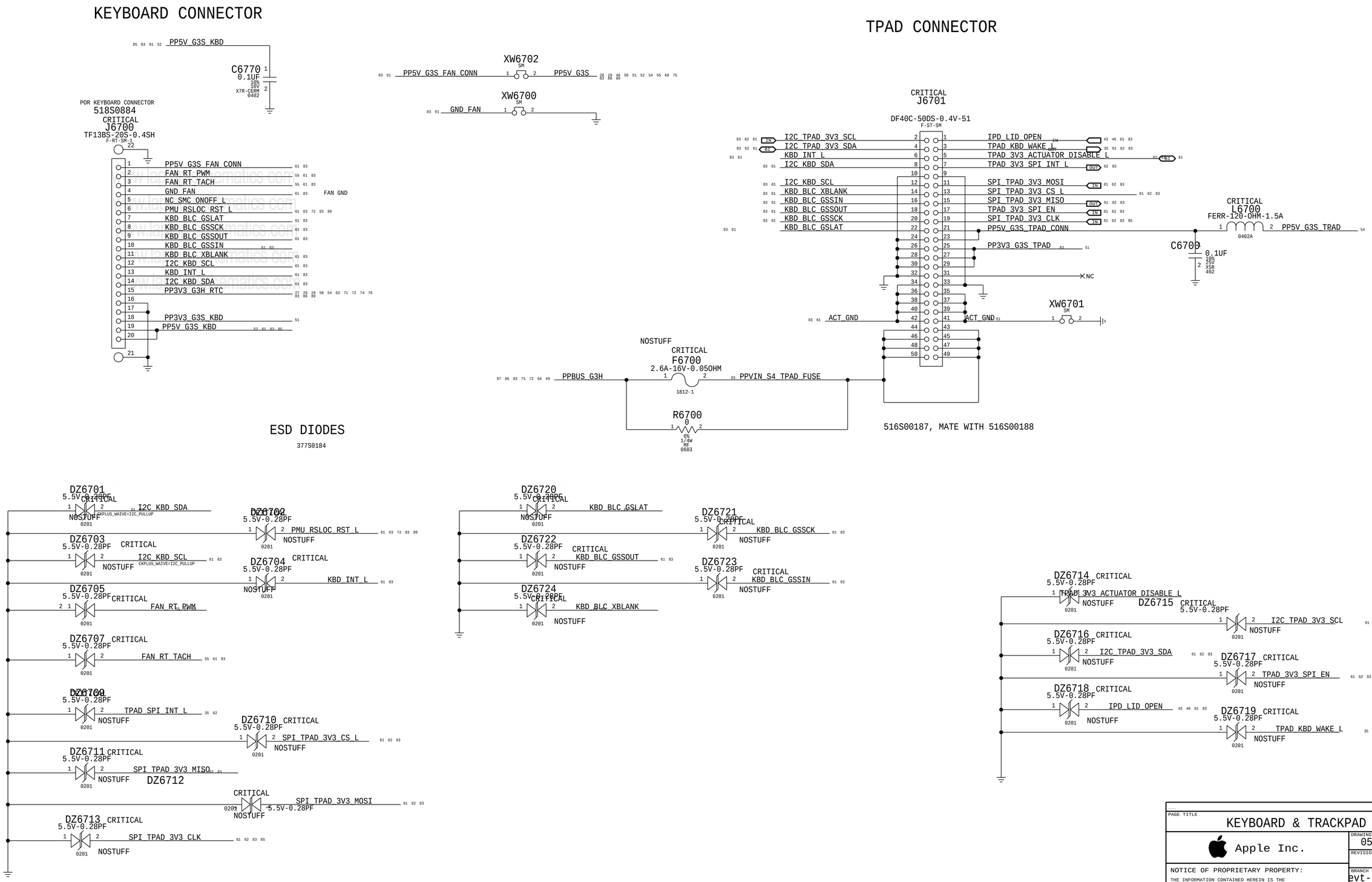

PAGE TITLE
KEYBOARD & TRACKPAD 1

Apple Inc.

DRAWING NUMBER 051-04273 SIZE D
REVISION 4.0.0
BRANCH evt-1
PAGE 67 OF 500
SHEET 61 OF 98

NOTICE OF PROPRIETARY PROPERTY:
THE INFORMATION CONTAINED HEREIN IS THE PROPRIETARY PROPERTY OF APPLE INC.
THE POSESSOR AGREES TO THE FOLLOWING:
I TO MAINTAIN THIS DOCUMENT IN CONFIDENCE
II NOT TO REPRODUCE OR COPY IT
III NOT TO REVEAL OR PUBLISH IT IN WHOLE OR PART
IV ALL RIGHTS RESERVED

Trackpad Level Shifting

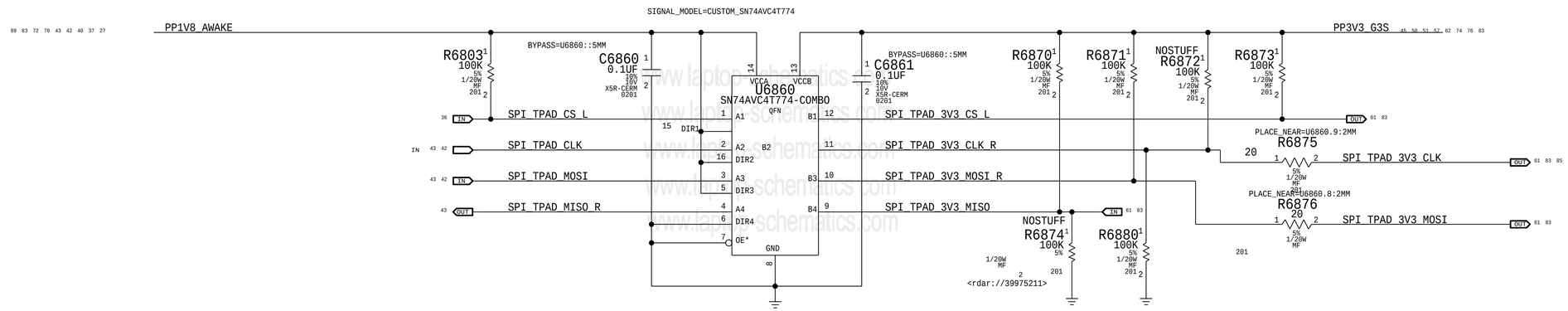

I2C FOR TEMPERATURE SENSOR ON TPAD

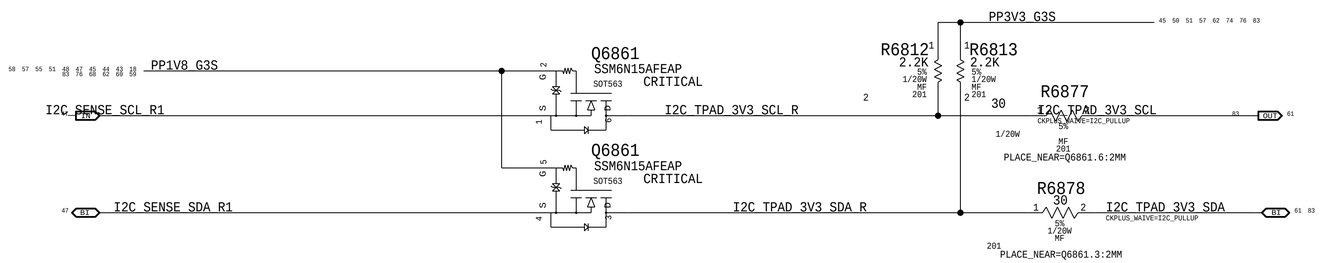

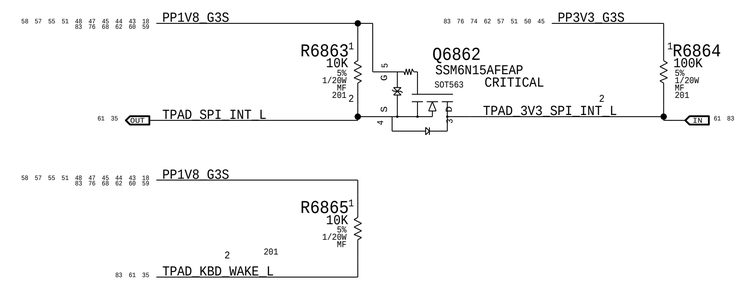

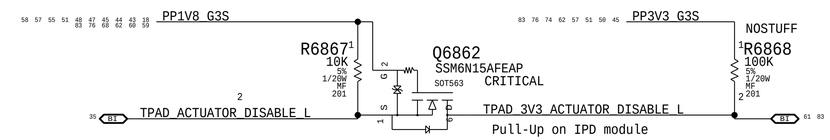

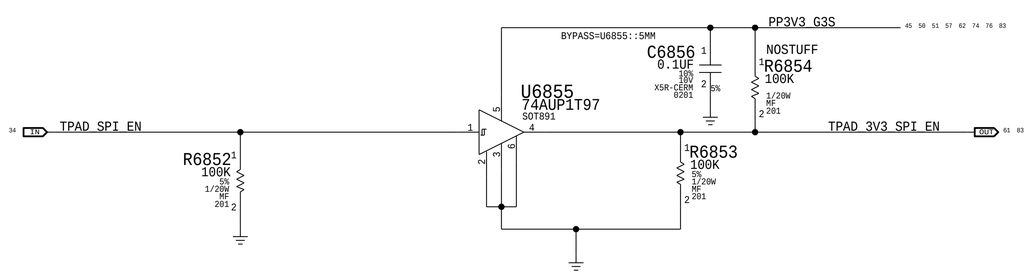

BOM_COST_GROUP=TRACKPAD

PAGE TITLE	KEYBOARD & TRACKPAD 2
	Apple Inc.
DRAWING NUMBER	051-04273
SIZE	D
REVISION	4.0.0
BRANCH	evt-1
PAGE	68 OF 500
SHEET	62 OF 98

NOTICE OF PROPRIETARY PROPERTY:
THE INFORMATION CONTAINED HEREIN IS THE PROPRIETARY PROPERTY OF APPLE INC.
THE POSESSOR AGREES TO THE FOLLOWING:
I TO MAINTAIN THIS DOCUMENT IN CONFIDENCE
II NOT TO REPRODUCE OR COPY IT
III NOT TO REVEAL OR PUBLISH IT IN WHOLE OR PART
IV ALL RIGHTS RESERVED

BMU LOGIC CONNECTOR

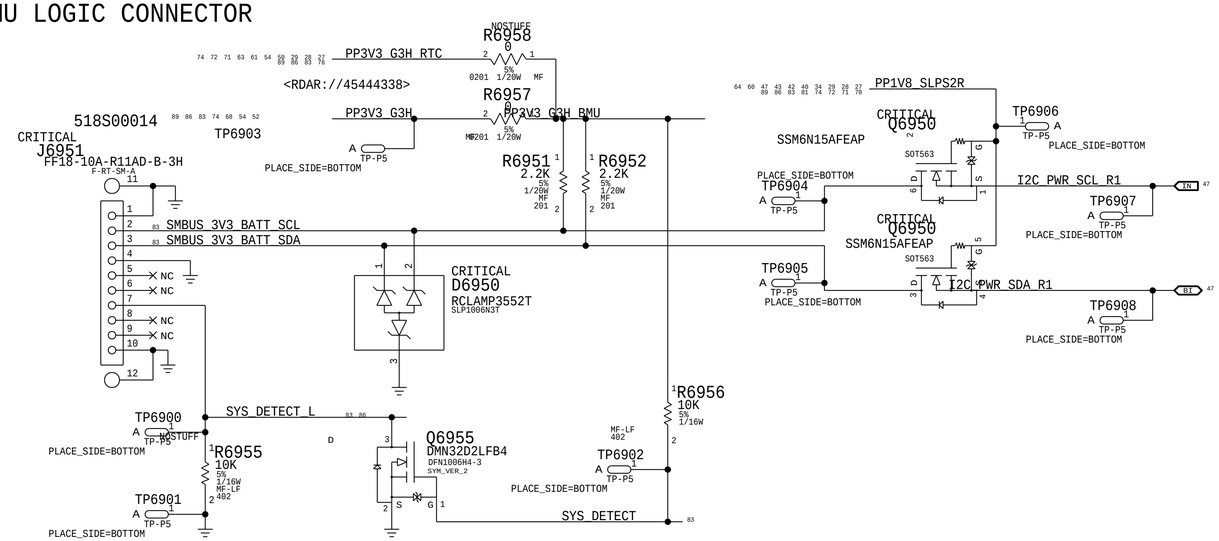

BATTERY (BMU) FLEX SOLDER PADS

BMU POWER FLEX IS SOLDERED TO MLB.

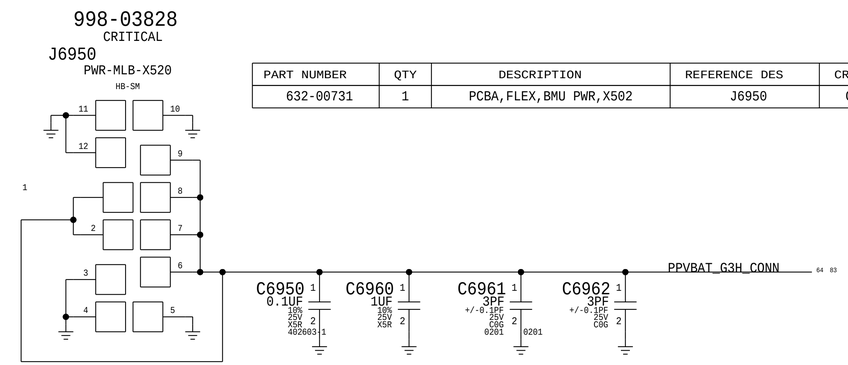

PART NUMBER	QTY	DESCRIPTION	REFERENCE DES	CRITICAL	BOM OPTION
632-00731	1	PCBA,FLEX,BMU PWR,X502	J6950	CRITICAL	

SMC Reset Circuit

Right Shift & Left Option Control
followed by ON OFF button press.

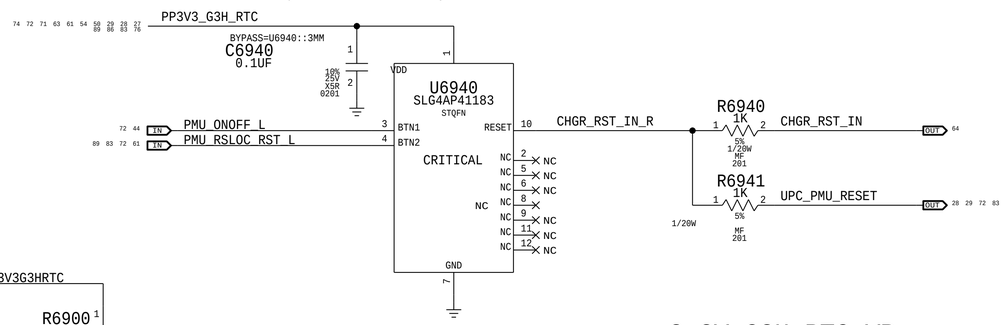

3.3V G3H RTC VR

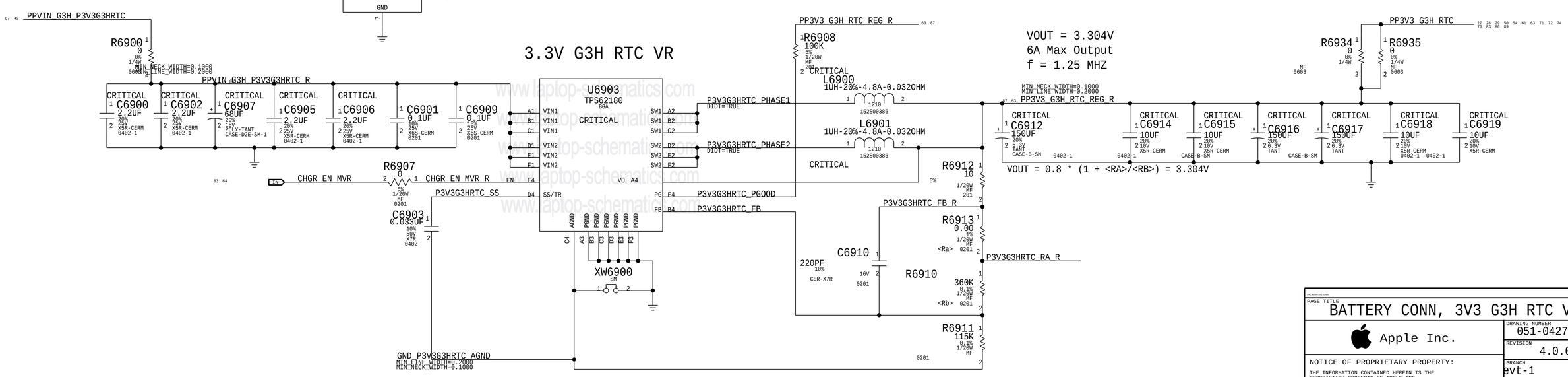

BOM_COST_GROUP=PLATFORM POWER

PAGE TITLE	BATTERY CONN, 3V3 G3H RTC VR
Apple Inc.	DRAWING NUMBER 051-04273 SIZE D
	REVISION 4.0.0
NOTICE OF PROPRIETARY PROPERTY: THE INFORMATION CONTAINED HEREIN IS THE PROPRIETARY PROPERTY OF APPLE INC. THE POSESSOR AGREES TO THE FOLLOWING: I TO MAINTAIN THIS DOCUMENT IN CONFIDENCE II NOT TO REPRODUCE OR COPY IT III NOT TO REVEAL OR PUBLISH IT IN WHOLE OR PART IV ALL RIGHTS RESERVED	BRANCH evt-1
	PAGE 69 OF 500
	SHEET 63 OF 98

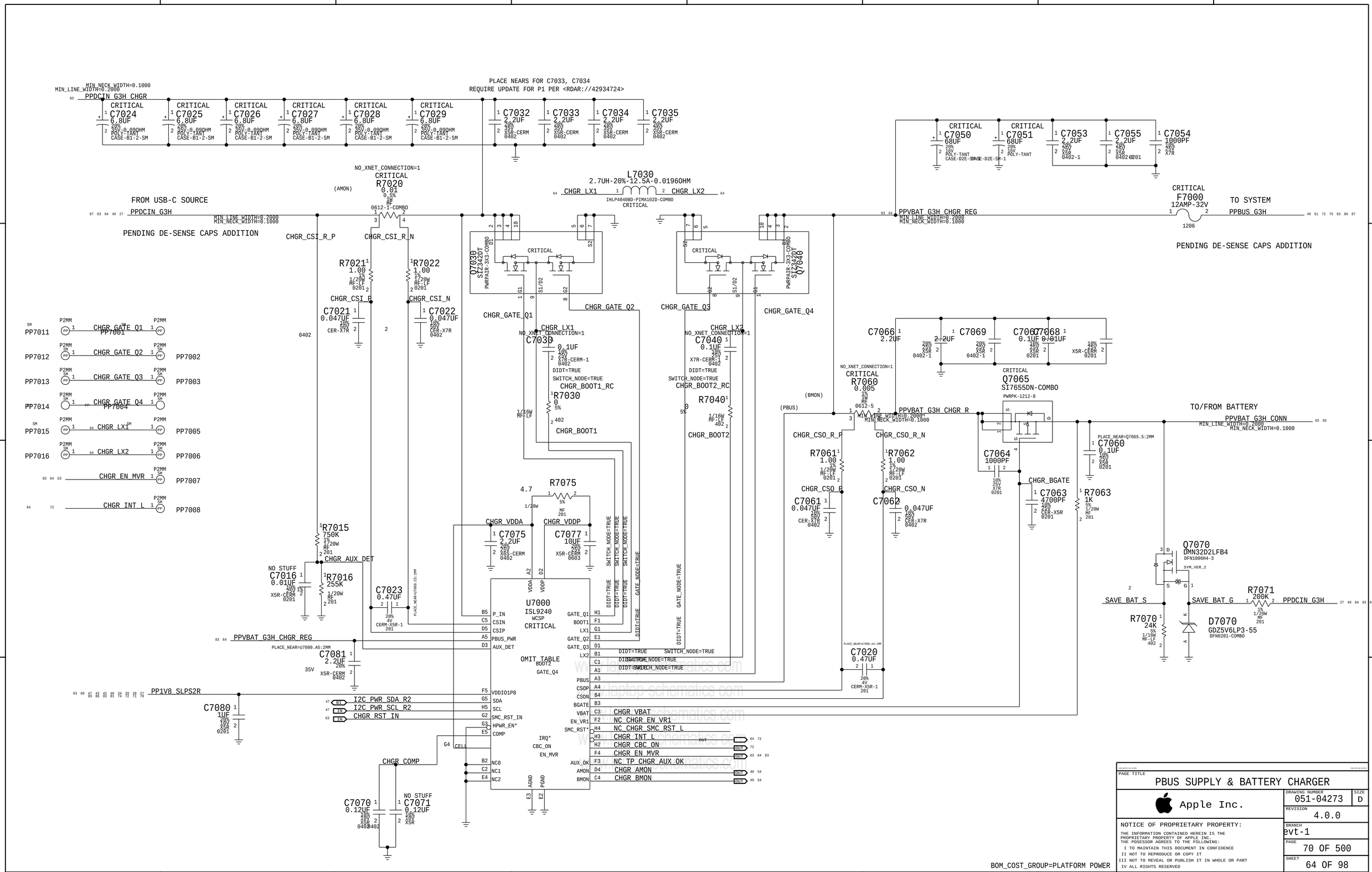
PPDCIN G3H CHGR
MIN_NECK_WIDTH=0.1000
MIN_LINE_WIDTH=0.2000
PLACE NEARS FOR C7033, C7034
REQUIRE UPDATE FOR P1 PER <RDAR://42934724>
C7024 6.8UF
C7025 6.8UF
C7026 6.8UF
C7027 6.8UF
C7028 6.8UF
C7029 6.8UF
C7032 2.2UF
C7033 2.2UF
C7034 2.2UF
C7035 2.2UF
C7050 68UF
C7051 68UF
C7053 2.2UF
C7055 2.2UF
C7054 1000PF
FROM USB-C SOURCE
PPDCIN G3H
PENDING DE-SENSE CAPS ADDITION
R7020 0.01
L7030 2.7UH-20%-12.5A-0.0196OHM
CHGR_LX1
CHGR_LX2
PPVBAT G3H CHGR REG
F7000 12AMP-32V
TO SYSTEM
PPBUS G3H
PENDING DE-SENSE CAPS ADDITION
CHGR_CSI_R_P
CHGR_CSI_R_N
R7021 1.00
R7022 1.00
CHGR_CSI_P
CHGR_CSI_N
C7021 0.047UF
C7022 0.047UF
Q7030 SI7342DT
Q7040 SI7342DT
CHGR_GATE_Q1
CHGR_GATE_Q2
CHGR_GATE_Q3
CHGR_GATE_Q4
C7030 0.1UF
C7040 0.1UF
R7030 0
R7040 0
CHGR_BOOT1_RC
CHGR_BOOT2_RC
CHGR_BOOT1
CHGR_BOOT2
C7066 2.2UF
C7069 2.2UF
C7067 0.1UF
C7068 0.01UF
R7060 0.005
Q7065 SI7655DN-COMBO
PPVBAT G3H CHGR R
TO/FROM BATTERY
PPVBAT G3H CONN
C7060 0.1UF
R7061 1.00
R7062 1.00
CHGR_CSO_R_P
CHGR_CSO_R_N
CHGR_CSO_P
CHGR_CSO_N
C7061 0.047UF
C7062 0.047UF
C7064 1000PF
C7063 4700PF
CHGR_BGATE
R7063 1K
Q7070 DMN32D2LFB4
SAVE_BAT_S
SAVE_BAT_G
R7071 200K
PPDCIN G3H
R7070 24K
D7070 GDZ5V6LP3-55
PP7011 CHGR_GATE_Q1 PP7001
PP7012 CHGR_GATE_Q2 PP7002
PP7013 CHGR_GATE_Q3 PP7003
PP7014 CHGR_GATE_Q4 PP7004
PP7015 CHGR_LX1 PP7005
PP7016 CHGR_LX2 PP7006
CHGR_EN_MVR PP7007
CHGR_INT_L PP7008
R7015 750K
CHGR_AUX_DET
C7016 0.01UF
R7016 255K
C7023 0.47UF
R7075 4.7
CHGR_VDDA
CHGR_VDDP
C7075 2.2UF
C7077 10UF
U7000 ISL9240 WCSP CRITICAL
PPVBAT G3H CHGR REG
C7081 2.2UF
PP1V8 SLPS2R
C7080 1UF
I2C_PWR_SDA_R2
I2C_PWR_SCL_R2
CHGR_RST_IN
CHGR_COMP
C7070 0.12UF
C7071 0.12UF
C7020 0.47UF
CHGR_VBAT
NC_CHGR_EN_VR1
NC_CHGR_SMC_RST_L
CHGR_INT_L
CHGR_CBC_ON
CHGR_EN_MVR
NC_TP_CHGR_AUX_OK
CHGR_AMON
CHGR_BMON
OMIT_TABLE
BOM_COST_GROUP=PLATFORM POWER
PAGE TITLE
PBUS SUPPLY & BATTERY CHARGER
Apple Inc.
DRAWING NUMBER 051-04273
SIZE D
REVISION 4.0.0
BRANCH evt-1
PAGE 70 OF 500
SHEET 64 OF 98
NOTICE OF PROPRIETARY PROPERTY:
THE INFORMATION CONTAINED HEREIN IS THE PROPRIETARY PROPERTY OF APPLE INC.
THE POSESSOR AGREES TO THE FOLLOWING:
I TO MAINTAIN THIS DOCUMENT IN CONFIDENCE
II NOT TO REPRODUCE OR COPY IT
III NOT TO REVEAL OR PUBLISH IT IN WHOLE OR PART
IV ALL RIGHTS RESERVED

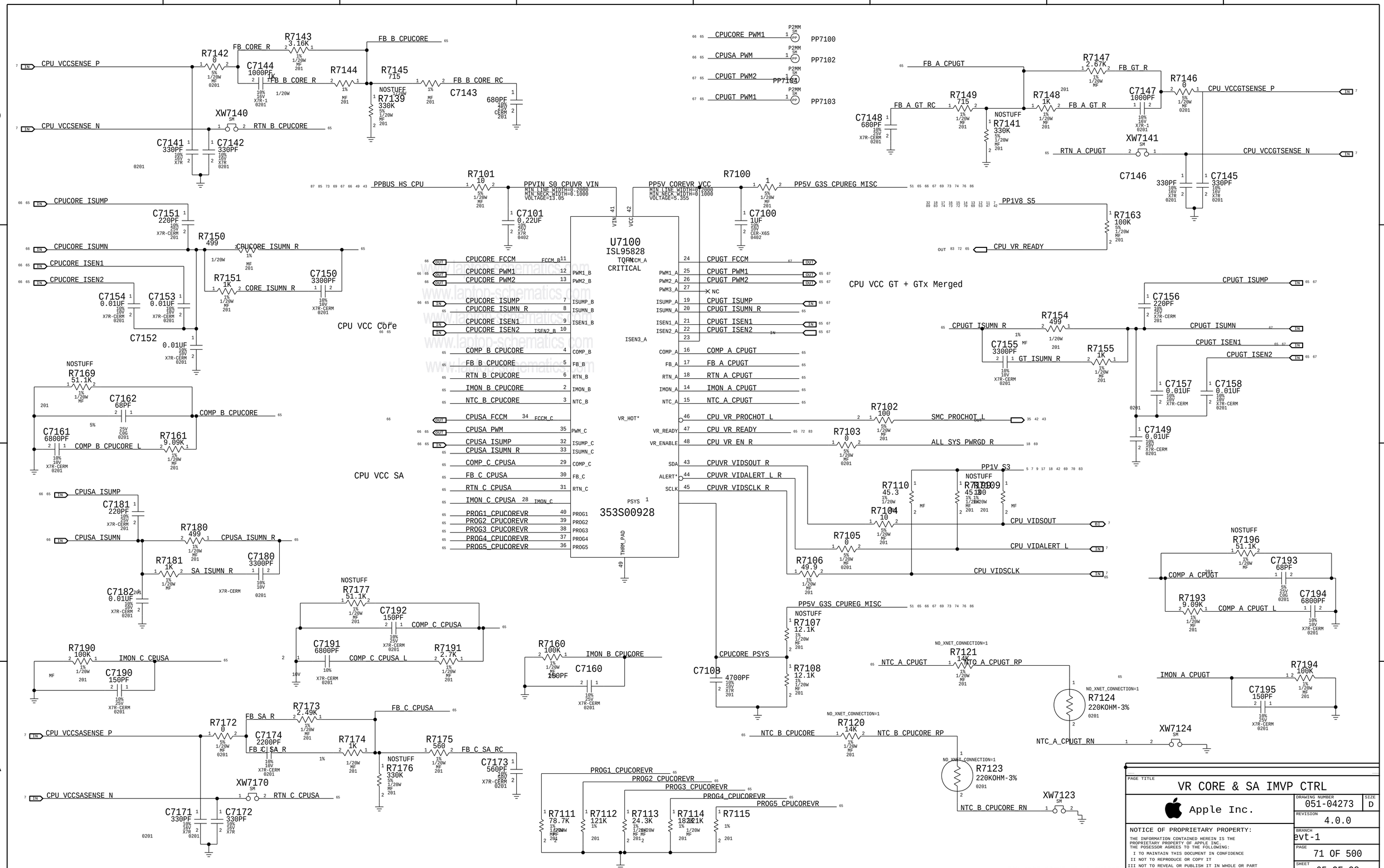

PAGE TITLE
VR CORE & SA IMVP CTRL

Apple Inc.

DRAWING NUMBER 051-04273 SIZE D
REVISION 4.0.0
BRANCH evt-1
PAGE 71 OF 500
SHEET 65 OF 98

NOTICE OF PROPRIETARY PROPERTY:
THE INFORMATION CONTAINED HEREIN IS THE PROPRIETARY PROPERTY OF APPLE INC.
THE POSESSOR AGREES TO THE FOLLOWING:
I TO MAINTAIN THIS DOCUMENT IN CONFIDENCE
II NOT TO REPRODUCE OR COPY IT
III NOT TO REVEAL OR PUBLISH IT IN WHOLE OR PART
IV ALL RIGHTS RESERVED

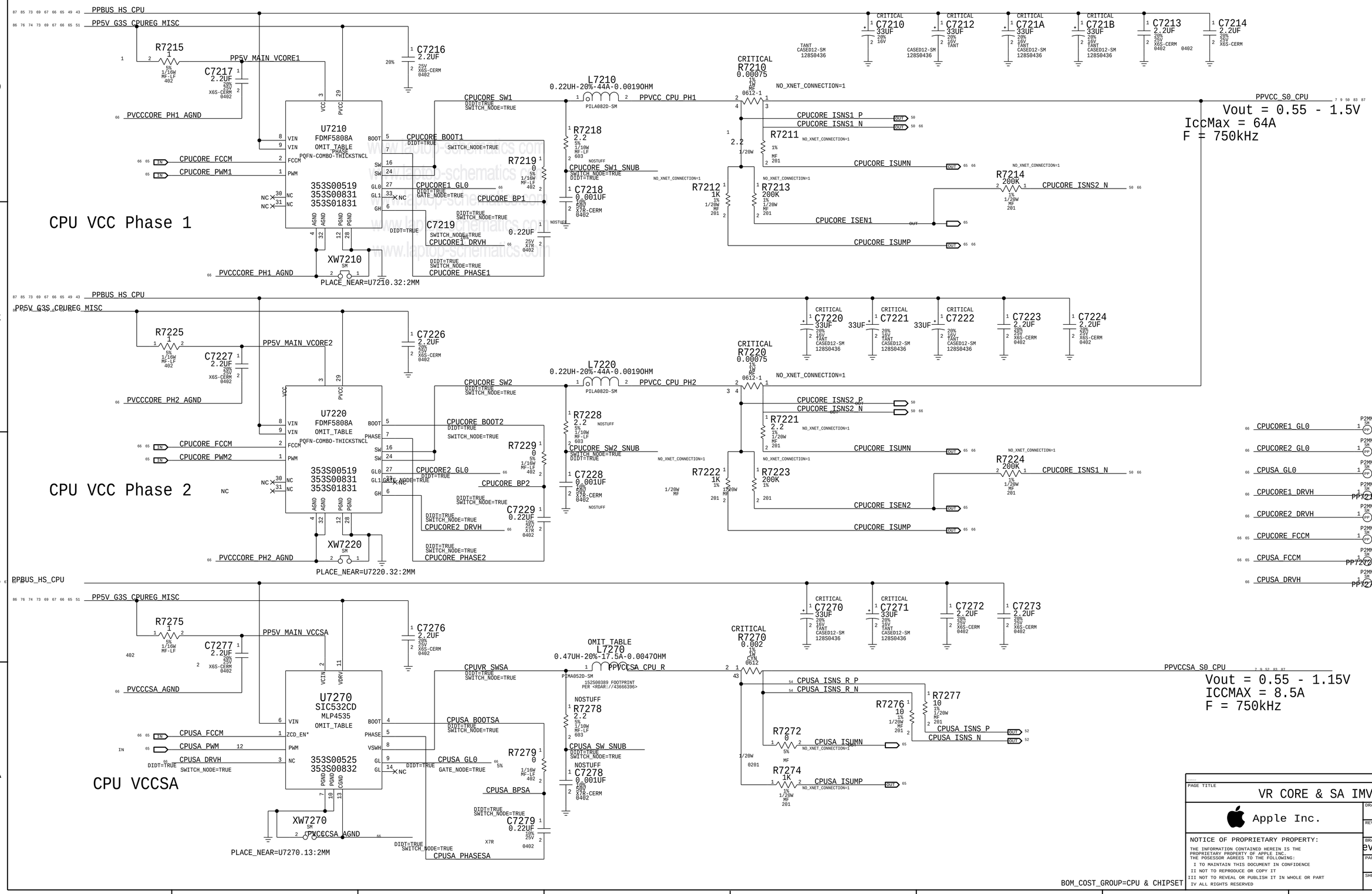

PAGE TITLE	VR CORE & SA IMVP
	Apple Inc.
DRAWING NUMBER	051-04273
SIZE	D
REVISION	4.0.0
BRANCH	evt-1
PAGE	72 OF 500
SHEET	66 OF 98

NOTICE OF PROPRIETARY PROPERTY:
THE INFORMATION CONTAINED HEREIN IS THE PROPRIETARY PROPERTY OF APPLE INC.
THE POSESSOR AGREES TO THE FOLLOWING:
I TO MAINTAIN THIS DOCUMENT IN CONFIDENCE
II NOT TO REPRODUCE OR COPY IT
III NOT TO REVEAL OR PUBLISH IT IN WHOLE OR PART
IV ALL RIGHTS RESERVED

Vout = 0.55 - 1.5V
IccMax = 64A
F = 750kHz

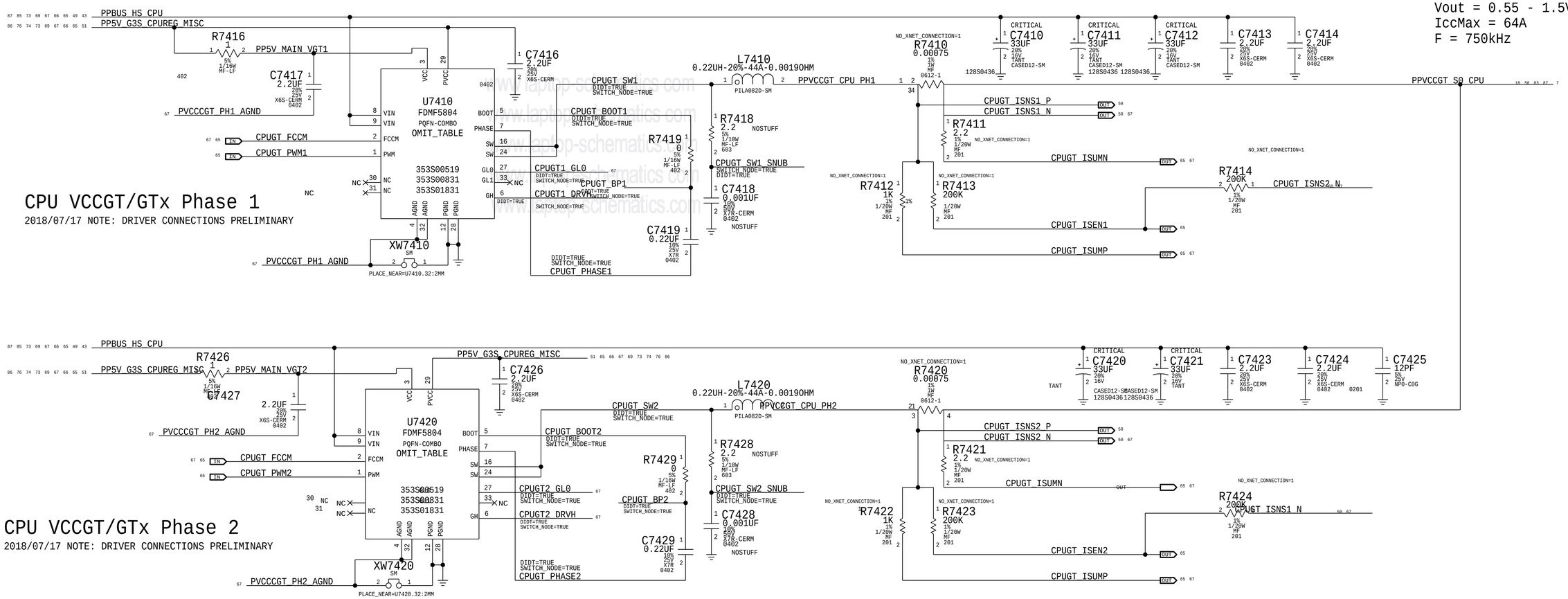

CPU VCCGT/GTx Phase 1

2018/07/17 NOTE: DRIVER CONNECTIONS PRELIMINARY

CPU VCCGT/GTx Phase 2

2018/07/17 NOTE: DRIVER CONNECTIONS PRELIMINARY

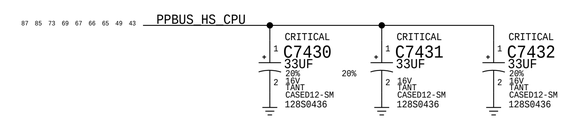

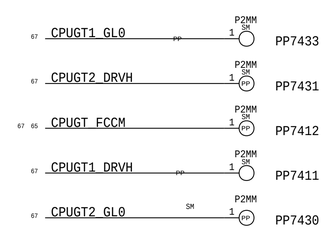

BOM_COST_GROUP=CPU & CHIPSET

PAGE TITLE
VR GT & GTX IMVP

Apple Inc.

DRAWING NUMBER 051-04273
SIZE D
REVISION 4.0.0
BRANCH evt-1
PAGE 74 OF 500
SHEET 67 OF 98

NOTICE OF PROPRIETARY PROPERTY:
THE INFORMATION CONTAINED HEREIN IS THE PROPRIETARY PROPERTY OF APPLE INC.
THE POSESSOR AGREES TO THE FOLLOWING:
I TO MAINTAIN THIS DOCUMENT IN CONFIDENCE
II NOT TO REPRODUCE OR COPY IT
III NOT TO REVEAL OR PUBLISH IT IN WHOLE OR PART
IV ALL RIGHTS RESERVED

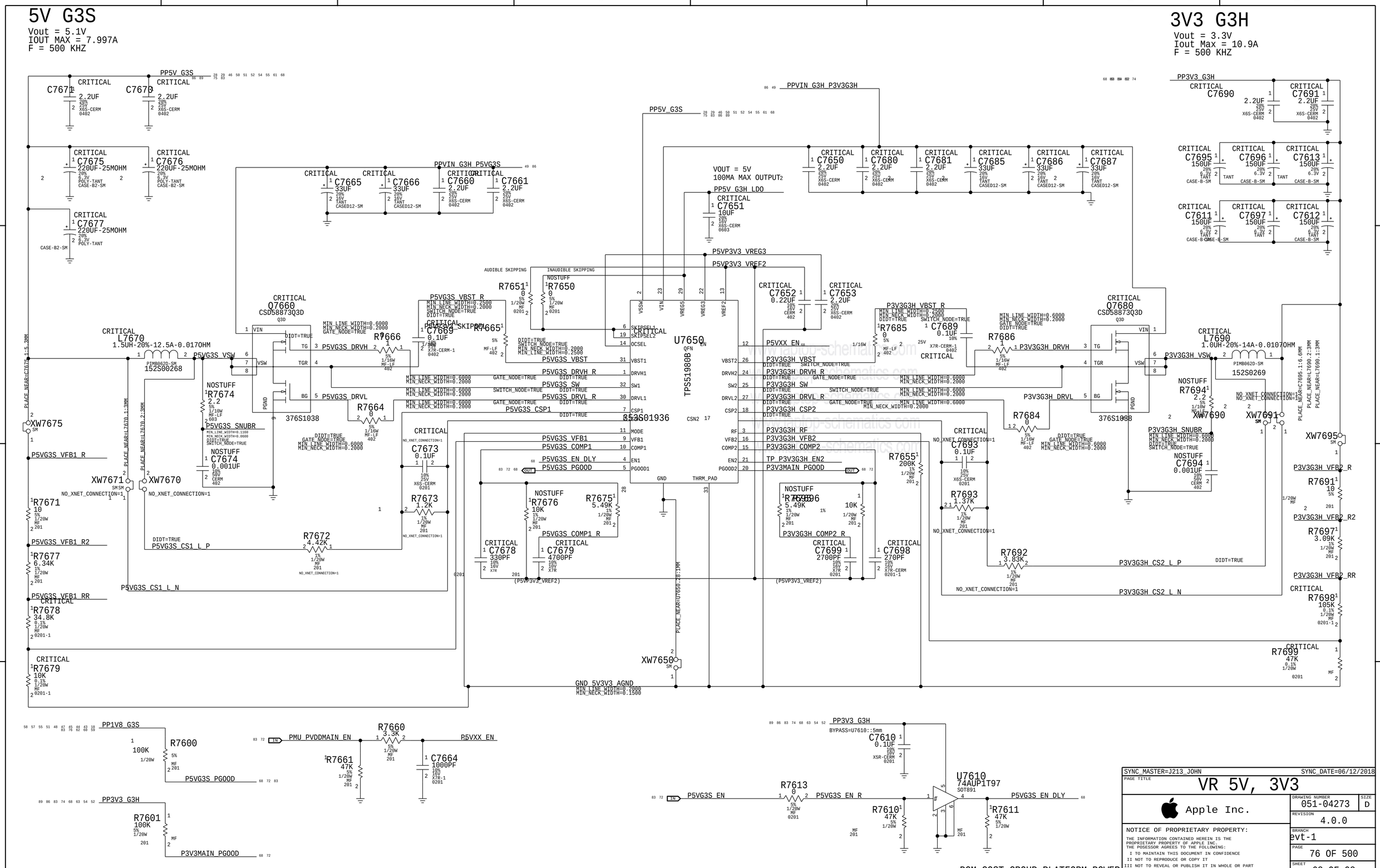

SYNC_MASTER=J213_JOHN SYNC_DATE=06/12/2018

PAGE TITLE: VR 5V, 3V3

Apple Inc.

DRAWING NUMBER: 051-04273 SIZE: D

REVISION: 4.0.0

BRANCH: evt-1

PAGE: 76 OF 500

SHEET: 68 OF 98

NOTICE OF PROPRIETARY PROPERTY:
THE INFORMATION CONTAINED HEREIN IS THE PROPRIETARY PROPERTY OF APPLE INC.
THE POSESSOR AGREES TO THE FOLLOWING:
I TO MAINTAIN THIS DOCUMENT IN CONFIDENCE
II NOT TO REPRODUCE OR COPY IT
III NOT TO REVEAL OR PUBLISH IT IN WHOLE OR PART
IV ALL RIGHTS RESERVED

1V EDRAM & EOPIO

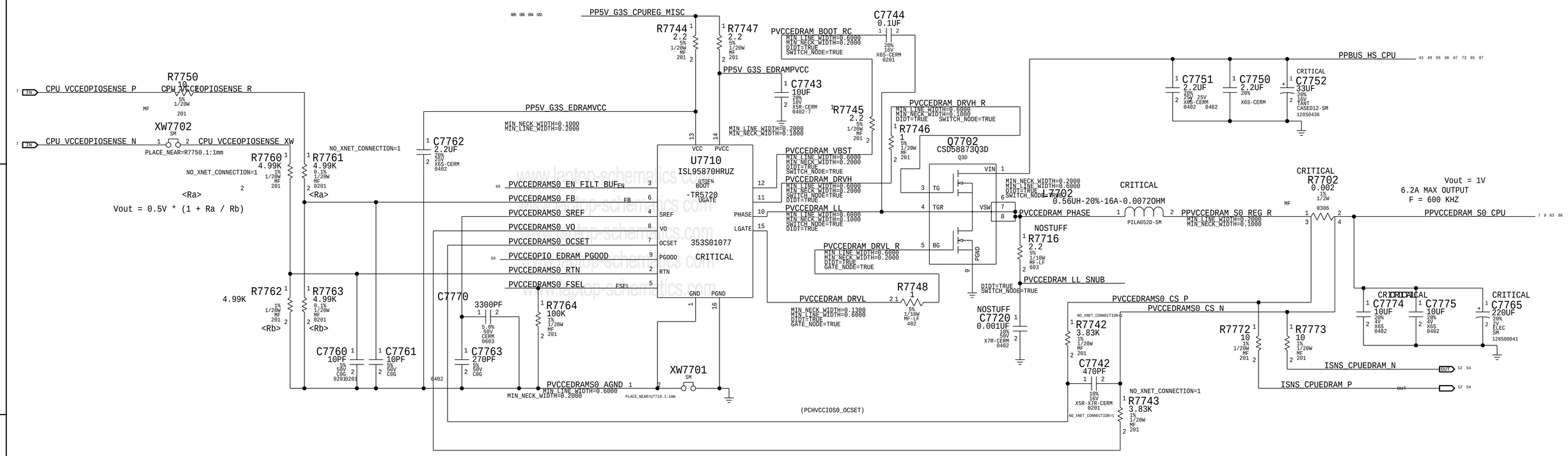

PAGE TITLE	VR EOPIO EDRAM
Apple Inc.	DRAWING NUMBER 051-04273 — SIZE D
	REVISION 4.0.0
NOTICE OF PROPRIETARY PROPERTY: THE INFORMATION CONTAINED HEREIN IS THE PROPRIETARY PROPERTY OF APPLE INC. THE POSESSOR AGREES TO THE FOLLOWING: I TO MAINTAIN THIS DOCUMENT IN CONFIDENCE II NOT TO REPRODUCE OR COPY IT III NOT TO REVEAL OR PUBLISH IT IN WHOLE OR PART IV ALL RIGHTS RESERVED	BRANCH evt-1
	PAGE 77 OF 500
	SHEET 69 OF 98

Note : Design based on Calpe ERS - D2449-A0-110-00_0v3.pdf (Radar# 24696002)
System Block Diagram - T290 Power System Architecture .v9
Optimize components for individual projects based on EDP(A)
Buck 0, 2, 5, 7, 8, 9 and 10 have option for Remote Sense.

CRITICAL
OMIT_TABLE

U7800
D2449A0P0FUAVAE2
WLCSP
SYM 2 OF 4

BUCK INPUT

PP3V3 G3H PMU VDDMAIN

C7801 10UF 20% 6.3V CER-X6S 0402
C7802 10UF 20% 6.3V CER-X6S 0402
C7803 10UF 20% 6.3V CER-X6S 0402
C7804 10UF 20% 6.3V CER-X6S 0402
C7805 10UF 20% 6.3V CER-X6S 0402
C7806 10UF 20% 6.3V 0402
C7807 10UF 20% 6.3V 0402
C7808 10UF 20% 6.3V CER-X6S 0402
C7809 10UF 20% 6.3V CER-X6S 0402
C7810 10UF 20% 6.3V CER-X6S 0402
C7891 10UF 20% 6.3V CER-X6S 0402
C7895 10UF 20% 6.3V CER-X6S 0402
C78A3 10UF 20% 6.3V CER-X6S 0402
C78E2 10UF 20% 6.3V CER-X6S 0402

Resistor Divider from PBUS
PMU_VDD_HI
PP1V8_SLPS2R_PMUVDDGPIO
MIN_LINE_WIDTH=0.2000
MIN_NECK_WIDTH=0.1000
VOLTAGE=1.89
C7800 0.1UF 10% 6.3V X6S 0201

C7892 1UF 20% 6.3V X6S-CERM 0201
C7893 1UF 20% 6.3V X6S-CERM 0201
C7894 1UF 20% 6.3V X6S-CERM 0201
C78A0 1UF 20% 6.3V X6S-CERM 0201
C78A1 1UF 20% 6.3V X6S-CERM 0201
C78A2 1UF 20% 6.3V X6S-CERM 0201
C78CA 1UF 20% 6.3V X6S-CERM 0201
C78A4 1UF 20% 6.3V X6S-CERM 0201
C78A5 1UF 20% 6.3V X6S-CERM 0201
PLACE_SIDE=BOTTOM

C78A6 1UF 20% 6.3V X6S-CERM 0201
C78A7 1UF 20% 6.3V X6S-CERM 0201
C78A8 1UF 20% 6.3V X6S-CERM 0201
C78A9 1UF 20% 6.3V X6S-CERM 0201
C78B0 1UF 20% 6.3V X6S-CERM 0201
C78B1 1UF 20% 6.3V X6S-CERM 0201
C78E1 1UF 20% 6.3V X6S-CERM 0201
C78E3 1UF 20% 6.3V X6S-CERM 0201
C78E4 1UF 20% 6.3V X6S-CERM 0201
PLACE_SIDE=BOTTOM

C78C2 1UF 20% 6.3V X6S-CERM 0201
C78C3 1UF 20% 6.3V X6S-CERM 0201
C78C4 1UF 20% 6.3V X6S-CERM 0201
C78C5 1UF 20% 6.3V X6S-CERM 0201
C78C6 1UF 20% 6.3V X6S-CERM 0201
C78C7 1UF 20% 6.3V X6S-CERM 0201
C78C8 1UF 20% 6.3V X6S-CERM 0201
C78C9 1UF 20% 6.3V X6S-CERM 0201
C78CB 1UF 20% 6.3V X6S-CERM 0201
C78CC 1UF 20% 6.3V X6S-CERM 0201
PLACE_SIDE=BOTTOM PLACE_SIDE=BOTTOM PLACE_SIDE=BOTTOM PLACE_SIDE=BOTTOM PLACE_SIDE=BOTTOM

VOUT = 0.7-1 V
IOUT_MAX = 4 A
F = 3MHz
PPVPCORE_S5

C7860 20UF 20% 2.5V X6S-CERM 0402
C7861 20UF 20% 2.5V X6S-CERM 0402
C7862 20UF 20% 2.5V X6S-CERM 0402
C7863 20UF 20% 2.5V X6S-CERM 0402
C7864 20UF 20% 2.5V X6S-CERM 0402
C7865 20UF 20% 2.5V X6S-CERM 0402
C7889 20UF 20% 2.5V X6S-CERM 0402
C7890 20UF 20% 2.5V X6S-CERM 0402
C7866 20UF 20% 2.5V X6S-CERM 0402
C7867 20UF 20% 2.5V X6S-CERM 0402
C7868 20UF 20% 2.5V X6S-CERM 0402
C7869 20UF 20% 2.5V X6S-CERM 0402
C7870 20UF 20% 2.5V X6S-CERM 0402
C7871 20UF 20% 2.5V X6S-CERM 0402

CRITICAL
0.47UH-20%-4.8A-0.0340HM
L7819 0806-COMBO
PVPCORES5_SW0
MIN_LINE_WIDTH=0.6000
MIN_NECK_WIDTH=0.1000
SWITCH_NODE=TRUE
DIDT=TRUE

CRITICAL
0.47UH-20%-4.8A-0.0340HM
L7820 0806-COMBO
PVPCORES5_SW1
PLACE_NEAR=L7819.1:6MM
NOSTUFF
R7819 1PVPCORES5_FB_P 0201 5% MF 1/20W
PLACE_NEAR=U7800.G15:6MM
NOSTUFF
R7821 0 0201 5% MF 1/20W PVPCORES5_FB_N

CRITICAL
0.47UH-20%-4.8A-0.0340HM
L7821 0806-COMBO
P1VPRIM_SW0
DIDT=TRUE

CRITICAL
0.47UH-20%-4.8A-0.0340HM
L7822 0806-COMBO
P1VPRIM_SW1
PLACE_NEAR=L7822.1:5MM
NOSTUFF
R7820 0 0201 5% MF 1/20W P1VPRIM_FB

VOUT = 1.05 V
IOUT_MAX = 6 A
F = 3MHz
PP1V_PRIM

C78D0 20UF 20% 2.5V X6S-CERM 0402
C78D1 20UF 20% 2.5V X6S-CERM 0402
C78D2 20UF 20% 2.5V X6S-CERM 0402
C78D3 20UF 20% 2.5V X6S-CERM 0402
C78D4 20UF 20% 2.5V X6S-CERM 0402
C78D5 20UF 20% 2.5V X6S-CERM 0402
C7898 20UF 20% 2.5V X6S-CERM 0402
C7872 20UF 20% 2.5V X6S-CERM
C7873 20UF 20% 2.5V X6S-CERM 0402
C7874 20UF 20% 2.5V X6S-CERM
C7875 20UF 20% 2.5V X6S-CERM 0402
C7876 20UF 20% 2.5V X6S-CERM 0402
C7899 20UF 20% 2.5V X6S-CERM 0402
C7877 20UF 20% 2.5V X6S-CERM 0402
C7878 20UF 20% 2.5V X6S-CERM 0402
C7879 20UF 20% 2.5V X6S-CERM 0402
C7880 20UF 20% 2.5V X6S-CERM 0402
C7881 20UF 20% 2.5V X6S-CERM 0402

VOUT = 0.9 V
IOUT_MAX = 3 A
F = 3MHz
PP0V9_SSD0
R7823 should be stuffed when Buck9 is unused

C7882 20UF 20% 2.5V X6S-CERM 0402
C7883 20UF 20% 2.5V X6S-CERM 0402
C7884 20UF 20% 2.5V X6S-CERM 0402
C7885 20UF 20% 2.5V X6S-CERM 0402
C7886 20UF 20% 2.5V X6S-CERM 0402
C7887 20UF 20% 2.5V X6S-CERM 0402

CRITICAL
0.47UH-20%-4.8A-0.0340HM
L7823 0806-COMBO
P0V9SSD_SW0
MIN_LINE_WIDTH=0.6000
MIN_NECK_WIDTH=0.1000
DIDT=TRUE
SWITCH_NODE=TRUE
PLACE_NEAR=L7823.1:10MM
R7822 0 0201 5% MF 1/20W P0V9SSD_FB_P
NO_TEST=1
PLACE_NEAR=U7800.N14:10MM
R7823 0 0201 5% MF 1/20W P0V9SSD_FB_N
NO_TEST=1

VOUT = 1.2/1.8 V
IOUT_MAX = 3 A
F = 3MHz
PPVCCO_ANI SSD0

C78B2 20UF 20% 2.5V X6S-CERM 0402
C78B3 20UF 20% 2.5V X6S-CERM 0402
C78B4 20UF 20% 2.5V X6S-CERM 0402
C78B5 20UF 20% 2.5V X6S-CERM 0402
C78B6 20UF 20% 2.5V X6S-CERM6S-CERM 0402
C78B7 20UF 20% 2.5V 0402
C78B8 20UF 20% 2.5V X6S-CERM6S-CERM 0402
C78B9 20UF 20% 2.5V 0402
C78C0 20UF 20% 2.5V X6S-CERM 0402
C78C1 20UF 20% 2.5V X6S-CERM 0402

CRITICAL
0.47UH-20%-4.8A-0.0340HM
L7824 0806-COMBO
PVCCOSSD_SW0
MIN_LINE_WIDTH=0.6000
MIN_NECK_WIDTH=0.1000
DIDT=TRUE
SWITCH_NODE=TRUE
PLACE_NEAR=L7824.1:5MM
R7824 0 0201 5% MF 1/20W PVCCOSSD_FB

Vout = 0.625V - 1.06V
Iout_Max = 13.4A
F = 2MHz & 4MHz
PPVDDCPU_AWAKE

CRITICAL
1UH-20%-3.8A-0.055OHM
L7806 2016-COMBO
PVDDCPUAWAKE_SW0
SWITCH_NODE=TRUE
MIN_LINE_WIDTH=0.2000
MIN_NECK_WIDTH=0.1750
DIDT=TRUE

CRITICAL
0.22UH-20%-6.7A-0.023OHM
L7807 PINA20121T-SM
PVDDCPUAWAKE_SW1

CRITICAL
0.22UH-20%-6.7A-0.023OHM
L7808 PINA20121T-SM
PVDDCPUAWAKE_SW2

CRITICAL
0.22UH-20%-6.7A-0.023OHM
L7809 PINA20121T-SM
PVDDCPUAWAKE_SW3
PLACE_NEAR=L7806.2:5MM
R7806 0 0201 5% MF 1/20W
PVDDCPUAWAKE_FB

C7811 20UF 20% 2.5V X6S-CERM 0402
C7812 20UF 20% 2.5V X6S-CERM 0402
C7813 20UF 20% 2.5V X6S-CERM 0402 0402
C7821 20UF 20% 2.5V X6S-CERM 0402
C7822 20UF 20% 2.5V X6S-CERM 0402
C7823 20UF 20% 2.5V 0402
C7824 20UF 20% 2.5V X6S-CERM 0402
C7825 20UF 20% 2.5V X6S-CERM 0402
C7826 20UF 20% 2.5V X6S-CERM 0402
C7827 20UF 20% 2.5V X6S-CERM 0402
C7828 20UF 20% 2.5V X6S-CERM 0402

Vout = 0.8V - 1.06V
Iout_Max = 1A
F = 3MHz
PPVDDCPUSRAM_AWAKE

CRITICAL
1.0UH-20%-2.6A-0.0950HM
L7810 0805-COMBO
PVDDCPUSRAMAWAKE_SW0
PLACE_NEAR=L7810.2:5MM
R7811 0 0201 5% MF 1/20W
PVDDCPUSRAMAWAKE_FB

C7829 10UF 20% 4V X6S 0402-1
C7830 10UF 20% 4V X6S 0402-1

Vout = 0.82V
Iout_Max = 6A
F = 3MHz
PP0V82_SLPDDR

CRITICAL
1UH-20%-4.7A-0.040HM
L7811 2520
P0V8SLPDDR_SW0
SWITCH_NODE=TRUE
MIN_LINE_WIDTH=0.2000
MIN_NECK_WIDTH=0.1750
DIDT=TRUE

CRITICAL
0.47UH-20%-4.8A-0.034OHM
L7812 0806-COMBO
P0V8SLPDDR_SW1
PLACE_NEAR=L7812.2:5MM
NOSTUFF
R7812 0 0201 5% MF 1/20W
P0V8SLPDDR_FB

C7833 20UF 20% 2.5V X6S-CERM 0402
C7834 20UF 20% 2.5V X6S-CERM 0402
C7835 20UF 20% 2.5V X6S-CERM 0402
C7836 20UF 20% 2.5V X6S-CERM 0402
C7837 20UF 20% 2.5V X6S-CERM 0402
C7838 20UF 20% 2.5V X6S-CERM 0402
C7814 20UF 20% 2.5V X6S-CERM 0402
C7815 20UF 20% 2.5V X6S-CERM
C7831 20UF 20% 2.5V X6S-CERM 0402 0402
C7832 20UF 20% 2.5V X6S-CERM

Vout = 1.8V
Iout_Max = 2.5A
F = 3MHz
PP1V8_SLPS2R

CRITICAL
1UH-20%-3.8A-0.055OHM
L7813 2016-COMBO
P1V8SLPS2R_SW0
PLACE_NEAR=L7813.2:5MM
R7813 0 0201 5% MF 1/20W
P1V8SLPS2R_FB

C7839 20UF 20% 2.5V X6S-CERM 0402
C7840 20UF 20% 2.5V X6S-CERM 0402
C7841 20UF 20% 2.5V X6S-CERM 0402
C7842 20UF 20% 2.5V X6S-CERM 0402
C7843 20UF 20% 2.5V X6S-CERM 0402
C7844 20UF 20% 2.5V X6S-CERM 0402
C7845 20UF 20% 2.5V X6S-CERM 0402

Vout = 1.1V
Iout_Max = 4A
F = 3MHz
PP1V1_SLPS2R

CRITICAL
1UH-20%-3.8A-0.055OHM
L7814 2016-COMBO
P1V1SLPS2R_SW0
SWITCH_NODE=TRUE
MIN_LINE_WIDTH=0.2000
MIN_NECK_WIDTH=0.1750
DIDT=TRUE

CRITICAL
0.47UH-20%-4.8A-0.0340HM
L7815 0806-COMBO
P1V1SLPS2R_SW1
PLACE_NEAR=L7815.2:5MM
R7814 0 0201 5% MF 1/20W
P1V1SLPS2R_FB

C7846 20UF 20% 2.5V X6S-CERM6S-CERM 0402
C7847 20UF 20% 2.5V 0402
C7848 20UF 20% 2.5V X6S-CERM6S-CERM 0402
C7849 20UF 20% 2.5V 0402
C7850 20UF 20% 2.5V X6S-CERM 0402
C7851 20UF 20% 2.5V X6S-CERM 0402
C7816 20UF 20% 2.5V X6S-CERM 0402
C7817 20UF 20% 2.5V X6S-CERM 0402

Vout = 0.9V
Iout_Max = 4A
F = 3MHz
PP0V9_SLPDDR

CRITICAL
1UH-20%-3.8A-0.055OHM
L7816 2016-COMBO
P0V9SLPDDR_SW0
MIN_LINE_WIDTH=0.1750
MIN_NECK_WIDTH=0.2000
SWITCH_NODE=TRUE
DIDT=TRUE

CRITICAL
0.47UH-20%-4.8A-0.0340HM
L7817 0806-COMBO
P0V9SLPDDR_SW1
PLACE_NEAR=L7816.2:5MM
R7816 0 0201 5% MF 1/20W
NOSTUFF
P0V9SLPDDR_FB

C7852 20UF 20% 2.5V X6S-CERM 0402
C7853 20UF 20% 2.5V 0402
C7854 20UF 20% 2.5V X6S-CERM 0402
C7855 20UF 20% 2.5V 0402
C7856 20UF 20% 2.5V X6S-CERM 0402
C7857 20UF 20% 2.5V X6S-CERM 0402
C7818 20UF 20% 2.5V X6S-CERM 0402
C7819 20UF 20% 2.5V X6S-CERM 0402

Supplied Current

BUCK3_SW1	PP1V8_AWAKE	0.3A
BUCK3_SW2	PP1V8_SLPS2R_PMUVDDGPIO	0.3A
BUCK3_SW3_0	PP1V8_S5	1.0A
BUCK3_SW3_1		
BUCK3_SW4_0	PP1V8_S3	1.0A
BUCK3_SW4_1		
BUCK3_SW5	PP1V8_IO_SSD0_R	0.5A
BUCK4_SW1	NC	0.5A
BUCK6_SW1	NC	0.3A
BUCK8_SW1	NC_PPBUCK8_SW1	0.3A
BUCK8_SW2	PP1V_S3	0.3A

BOM_COST_GROUP=PLATFORM POWER

PAGE TITLE
PMIC BUCKS AND SWS

Apple Inc.

DRAWING NUMBER 051-04273
SIZE D
REVISION 4.0.0
BRANCH evt-1
PAGE 78 OF 500
SHEET 70 OF 98

NOTICE OF PROPRIETARY PROPERTY:
THE INFORMATION CONTAINED HEREIN IS THE PROPRIETARY PROPERTY OF APPLE INC.
THE POSESSOR AGREES TO THE FOLLOWING:
I TO MAINTAIN THIS DOCUMENT IN CONFIDENCE
II NOT TO REPRODUCE OR COPY IT
III NOT TO REVEAL OR PUBLISH IT IN WHOLE OR PART
IV ALL RIGHTS RESERVED

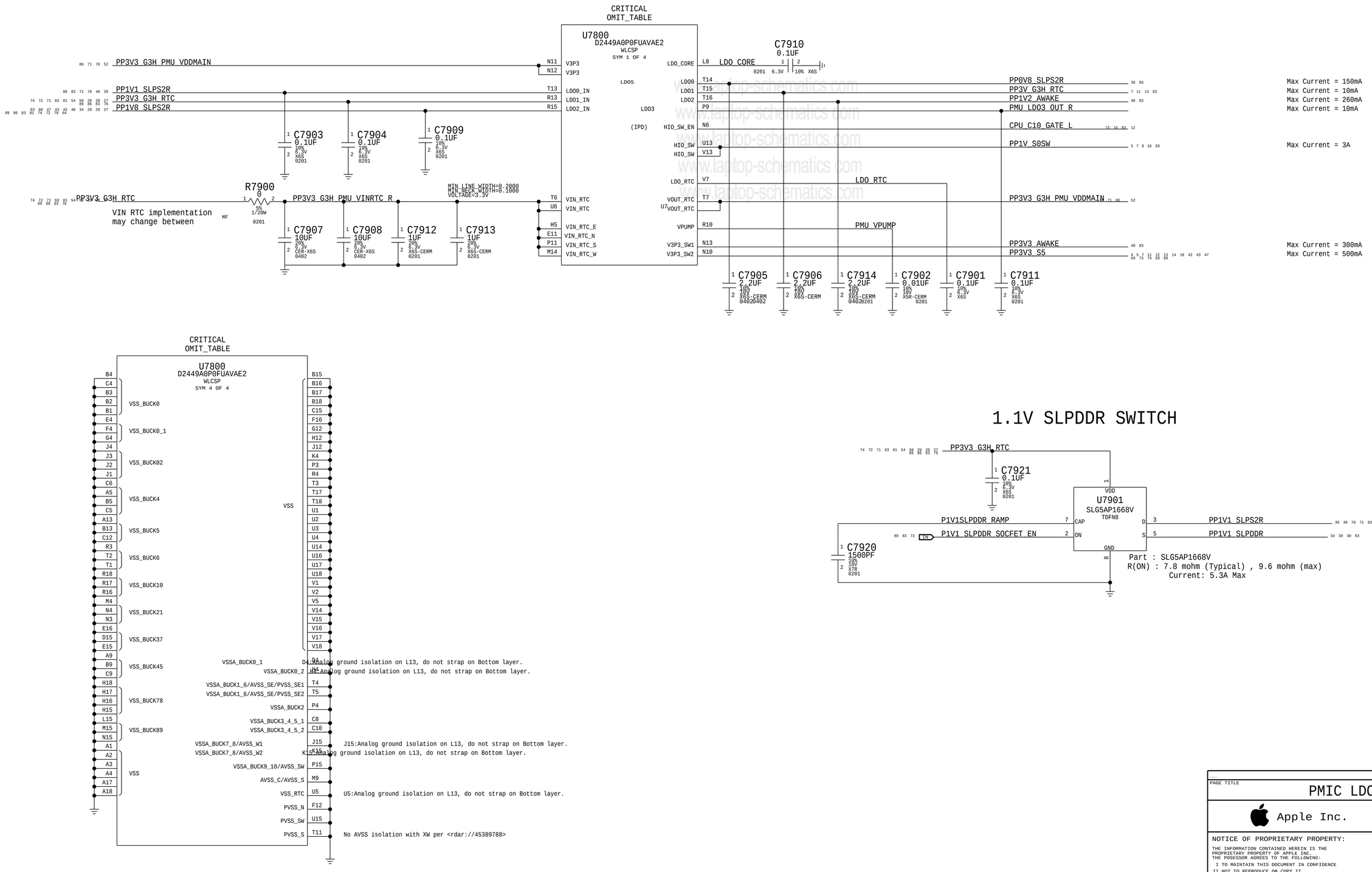

1.1V SLPDDR SWITCH

BOM_COST_GROUP=PLATFORM POWER

PAGE TITLE
PMIC LDOS

Apple Inc.

DRAWING NUMBER 051-04273
SIZE D
REVISION 4.0.0
BRANCH evt-1
PAGE 79 OF 500
SHEET 71 OF 98

NOTICE OF PROPRIETARY PROPERTY:
THE INFORMATION CONTAINED HEREIN IS THE PROPRIETARY PROPERTY OF APPLE INC.
THE POSESSOR AGREES TO THE FOLLOWING:
I TO MAINTAIN THIS DOCUMENT IN CONFIDENCE
II NOT TO REPRODUCE OR COPY IT
III NOT TO REVEAL OR PUBLISH IT IN WHOLE OR PART
IV ALL RIGHTS RESERVED

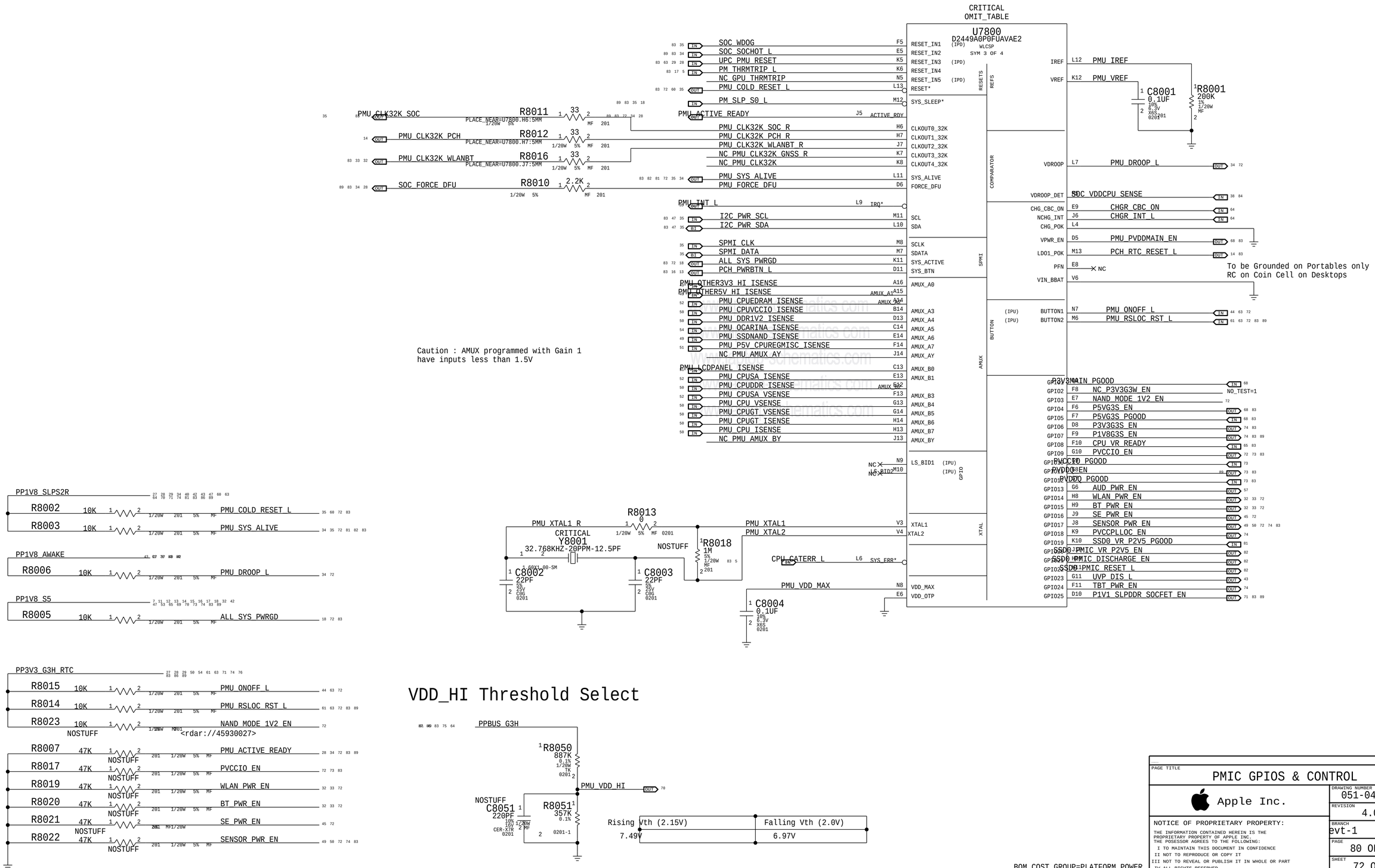
CRITICAL
OMIT_TABLE
U7800
D2449A0P0FUAVAE2
(IPD)
WLCSP
SYM 3 OF 4
RESET_IN1
RESET_IN2
RESET_IN3
RESET_IN4
RESET_IN5
RESET*
SYS_SLEEP*
CLKOUT0_32K
CLKOUT1_32K
CLKOUT2_32K
CLKOUT3_32K
CLKOUT4_32K
SYS_ALIVE
FORCE_DFU
SCL
SDA
SCLK
SDATA
SYS_ACTIVE
SYS_BTN
AMUX_A0
AMUX_A3
AMUX_A4
AMUX_A5
AMUX_A6
AMUX_A7
AMUX_AY
AMUX_B0
AMUX_B1
AMUX_B3
AMUX_B4
AMUX_B5
AMUX_B6
AMUX_B7
AMUX_BY
LS_BID1
LS_BID2
XTAL1
XTAL2
VDD_MAX
VDD_OTP
RESETS
REFS
COMPARATOR
SPMI
BUTTON
AMUX
GPIO
XTAL
SOC_WDOG
SOC_SOCHOT_L
UPC_PMU_RESET
PM_THRMTRIP_L
NC_GPU_THRMTRIP
PMU_COLD_RESET_L
PM_SLP_S0_L
PMU_ACTIVE_READY
PMU_CLK32K_SOC_R
PMU_CLK32K_PCH_R
PMU_CLK32K_WLANBT_R
NC_PMU_CLK32K_GNSS_R
NC_PMU_CLK32K
PMU_SYS_ALIVE
PMU_FORCE_DFU
PMU_INT_L
I2C_PWR_SCL
I2C_PWR_SDA
SPMI_CLK
SPMI_DATA
ALL_SYS_PWRGD
PCH_PWRBTN_L
PMU_OTHER3V3_HI_ISENSE
PMU_OTHER5V_HI_ISENSE
PMU_CPUEDRAM_ISENSE
PMU_CPUVCCIO_ISENSE
PMU_DDR1V2_ISENSE
PMU_OCARINA_ISENSE
PMU_SSDNAND_ISENSE
PMU_P5V_CPUREGMISC_ISENSE
NC_PMU_AMUX_AY
PMU_LCDPANEL_ISENSE
PMU_CPUSA_ISENSE
PMU_CPUDDR_ISENSE
PMU_CPUSA_VSENSE
PMU_CPU_VSENSE
PMU_CPUGT_VSENSE
PMU_CPUGT_ISENSE
PMU_CPU_ISENSE
NC_PMU_AMUX_BY
PMU_CLK32K_SOC
PMU_CLK32K_PCH
PMU_CLK32K_WLANBT
SOC_FORCE_DFU
R8011 33
R8012 33
R8016 33
R8010 2.2K
PLACE_NEAR=U7800.H6:5MM
PLACE_NEAR=U7800.H7:5MM
PLACE_NEAR=U7800.J7:5MM
Caution : AMUX programmed with Gain 1
have inputs less than 1.5V
IREF
VREF
VDROOP
VDROOP_DET
CHG_CBC_ON
NCHG_INT
CHG_POK
VPWR_EN
LDO1_POK
PFN
VIN_BBAT
BUTTON1
BUTTON2
PMU_IREF
PMU_VREF
C8001 0.1UF
R8001 200K
PMU_DROOP_L
SOC_VDDCPU_SENSE
CHGR_CBC_ON
CHGR_INT_L
PMU_PVDDMAIN_EN
PCH_RTC_RESET_L
NC
To be Grounded on Portables only
RC on Coin Cell on Desktops
PMU_ONOFF_L
PMU_RSLOC_RST_L
P3V3MAIN_PGOOD
NC_P3V3G3W_EN
NAND_MODE_1V2_EN
P5VG3S_EN
P5VG3S_PGOOD
P3V3G3S_EN
P1V8G3S_EN
CPU_VR_READY
PVCCIO_EN
PVCCIO_PGOOD
PVDDQ_EN
PVDDQ_PGOOD
AUD_PWR_EN
WLAN_PWR_EN
BT_PWR_EN
SE_PWR_EN
SENSOR_PWR_EN
PVCCPLLOC_EN
SSD0_VR_P2V5_PGOOD
SSD0_PMIC_VR_P2V5_EN
SSD0_PMIC_DISCHARGE_EN
SSD0_PMIC_RESET_L
UVP_DIS_L
TBT_PWR_EN
P1V1_SLPDDR_SOCFET_EN
NO_TEST=1
R8013 0
PMU_XTAL1_R
PMU_XTAL1
PMU_XTAL2
CRITICAL
Y8001
32.768KHZ-20PPM-12.5PF
NOSTUFF
R8018 1M
C8002 22PF
C8003 22PF
CPU_CATERR_L
SYS_ERR*
PMU_VDD_MAX
C8004 0.1UF
PP1V8_SLPS2R
R8002 10K PMU_COLD_RESET_L
R8003 10K PMU_SYS_ALIVE
PP1V8_AWAKE
R8006 10K PMU_DROOP_L
PP1V8_S5
R8005 10K ALL_SYS_PWRGD
PP3V3_G3H_RTC
R8015 10K PMU_ONOFF_L
R8014 10K PMU_RSLOC_RST_L
R8023 10K NAND_MODE_1V2_EN
NOSTUFF
R8007 47K PMU_ACTIVE_READY
R8017 47K PVCCIO_EN
R8019 47K WLAN_PWR_EN
R8020 47K BT_PWR_EN
R8021 47K SE_PWR_EN
R8022 47K SENSOR_PWR_EN
VDD_HI Threshold Select
PPBUS_G3H
R8050 887K
PMU_VDD_HI
NOSTUFF
C8051 220PF
R8051 357K
Rising Vth (2.15V)
Falling Vth (2.0V)
7.49V
6.97V
BOM_COST_GROUP=PLATFORM POWER
PAGE TITLE
PMIC GPIOS & CONTROL
Apple Inc.
DRAWING NUMBER
051-04273
SIZE
D
REVISION
4.0.0
BRANCH
evt-1
PAGE
80 OF 500
SHEET
72 OF 98
NOTICE OF PROPRIETARY PROPERTY:
THE INFORMATION CONTAINED HEREIN IS THE PROPRIETARY PROPERTY OF APPLE INC.
THE POSESSOR AGREES TO THE FOLLOWING:
I TO MAINTAIN THIS DOCUMENT IN CONFIDENCE
II NOT TO REPRODUCE OR COPY IT
III NOT TO REVEAL OR PUBLISH IT IN WHOLE OR PART
IV ALL RIGHTS RESERVED

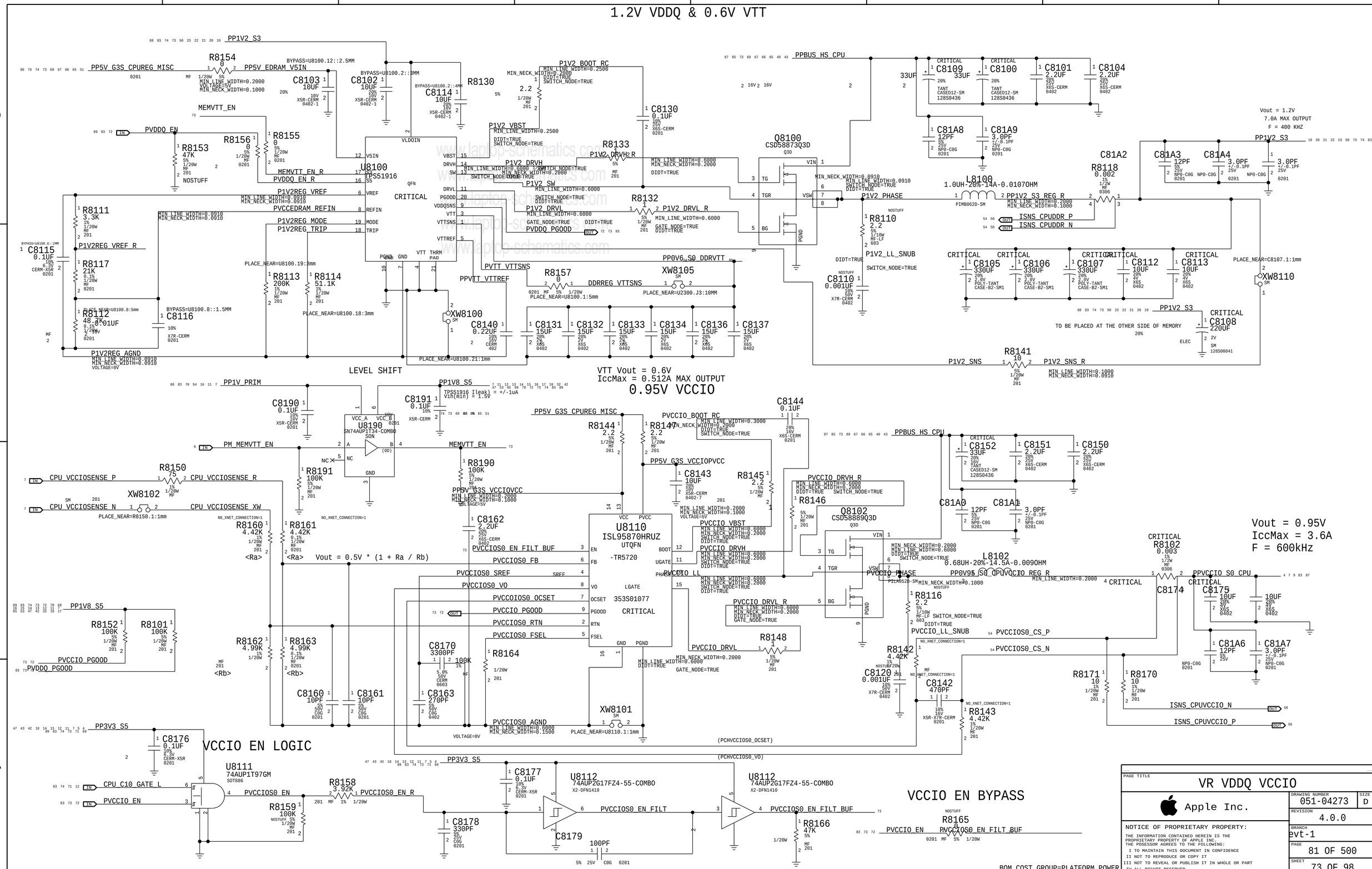
1.2V VDDQ & 0.6V VTT
U8100
TPS51916
QFN
CRITICAL
Q8100
CSD58873Q3D
Q3D
L8100
1.0UH-20%-14A-0.0107OHM
PIMB062D-SM
Vout = 1.2V
7.0A MAX OUTPUT
F = 400 KHZ
VTT Vout = 0.6V
IccMax = 0.512A MAX OUTPUT
0.95V VCCIO
LEVEL SHIFT
U8110
ISL95870HRUZ
UTQFN
-TR5720
353S01077
Vout = 0.5V * (1 + Ra / Rb)
Vout = 0.95V
IccMax = 3.6A
F = 600kHz
Q8102
CSD58889Q3D
Q3D
L8102
0.68UH-20%-14.5A-0.009OHM
VCCIO EN LOGIC
U8111
74AUP1T97GM
SOT886
U8112
74AUP2G17FZ4-55-COMBO
X2-DFN1410
VCCIO EN BYPASS
TO BE PLACED AT THE OTHER SIDE OF MEMORY
BOM_COST_GROUP=PLATFORM_POWER
PAGE TITLE
VR VDDQ VCCIO
Apple Inc.
DRAWING NUMBER
051-04273
SIZE
D
REVISION
4.0.0
BRANCH
evt-1
PAGE
81 OF 500
SHEET
73 OF 98
NOTICE OF PROPRIETARY PROPERTY:
THE INFORMATION CONTAINED HEREIN IS THE PROPRIETARY PROPERTY OF APPLE INC.
THE POSESSOR AGREES TO THE FOLLOWING:
I TO MAINTAIN THIS DOCUMENT IN CONFIDENCE
II NOT TO REPRODUCE OR COPY IT
III NOT TO REVEAL OR PUBLISH IT IN WHOLE OR PART
IV ALL RIGHTS RESERVED

3.3V G3 Standby Switch

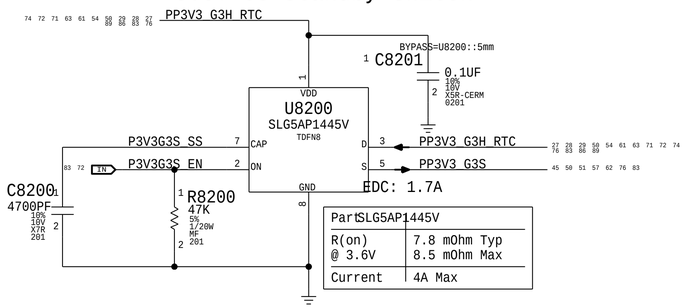

Part	SLG5AP1445V
R(on) @ 3.6V	7.8 mOhm Typ 8.5 mOhm Max
Current	4A Max

1.8V G3 Standby Switch

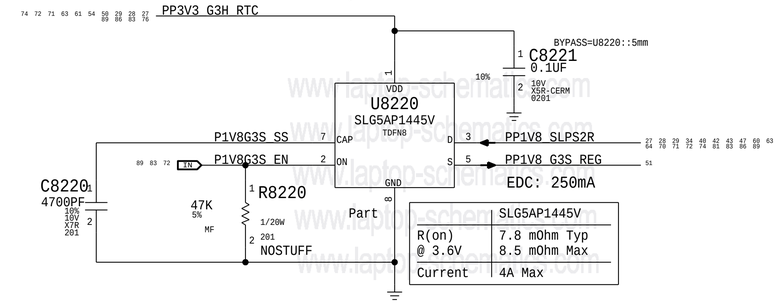

Part	SLG5AP1445V
R(on) @ 3.6V	7.8 mOhm Typ 8.5 mOhm Max
Current	4A Max

3.3V Sensor Switch

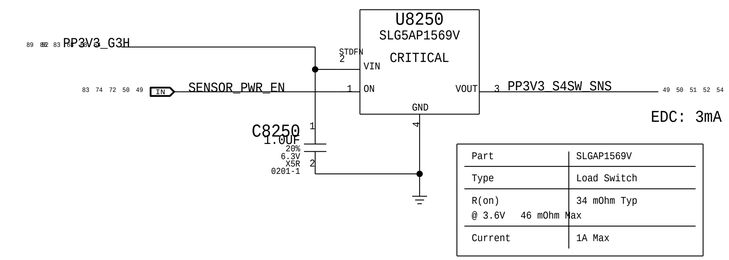

Part	SLGAP1569V
Type	Load Switch
R(on) @ 3.6V 46 mOhm Max	34 mOhm Typ
Current	1A Max

1.2V S0SW VCCPLL_OC Switch

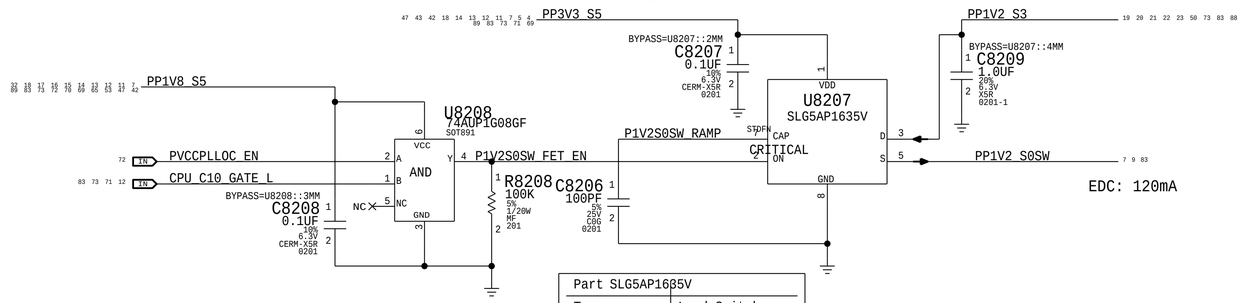

Part	SLG5AP1635V
Type	Load Switch
R(on) @ 3.3V	27.5 mOhm Typ 31 mOhm Max
Current	2.5A Max

VCCPLL_OC has turn-on requirement of
11uS min and 240uS max
from EN to 1.1V

5V Sensor Switch

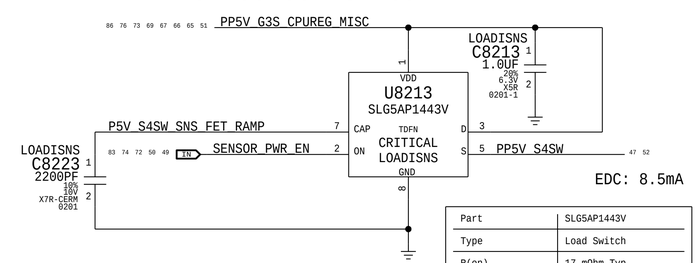

Part	SLG5AP1443V
Type	Load Switch
R(on)	17 mOhm Typ 19 mOhm Max
Current	2.5A

3.3V S0SW TBT X Switch

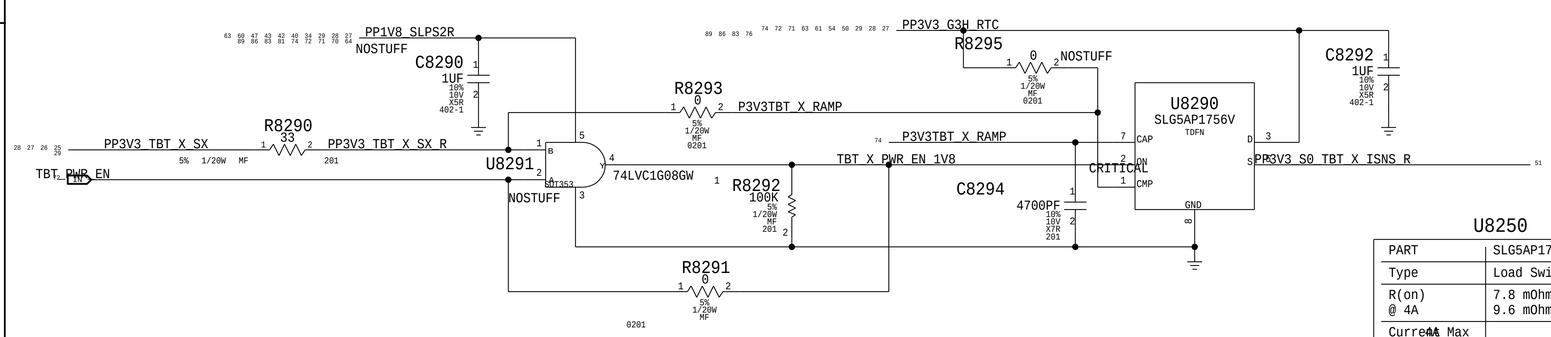

U8250

PART	SLG5AP1756V
Type	Load Switch
R(on) @ 4A	7.8 mOhm Typ 9.6 mOhm Max
Current	4A Max

BOM_COST_GROUP=PLATFORM_POWER

PAGE TITLE	Power FETs		
Apple Inc.		DRAWING NUMBER 051-04273	SIZE D
		REVISION 4.0.0	
		BRANCH evt-1	
		PAGE 82 OF 500	
		SHEET 74 OF 98	

NOTICE OF PROPRIETARY PROPERTY:
THE INFORMATION CONTAINED HEREIN IS THE PROPRIETARY PROPERTY OF APPLE INC.
THE POSESSOR AGREES TO THE FOLLOWING:
I TO MAINTAIN THIS DOCUMENT IN CONFIDENCE
II NOT TO REPRODUCE OR COPY IT
III NOT TO REVEAL OR PUBLISH IT IN WHOLE OR PART
IV ALL RIGHTS RESERVED

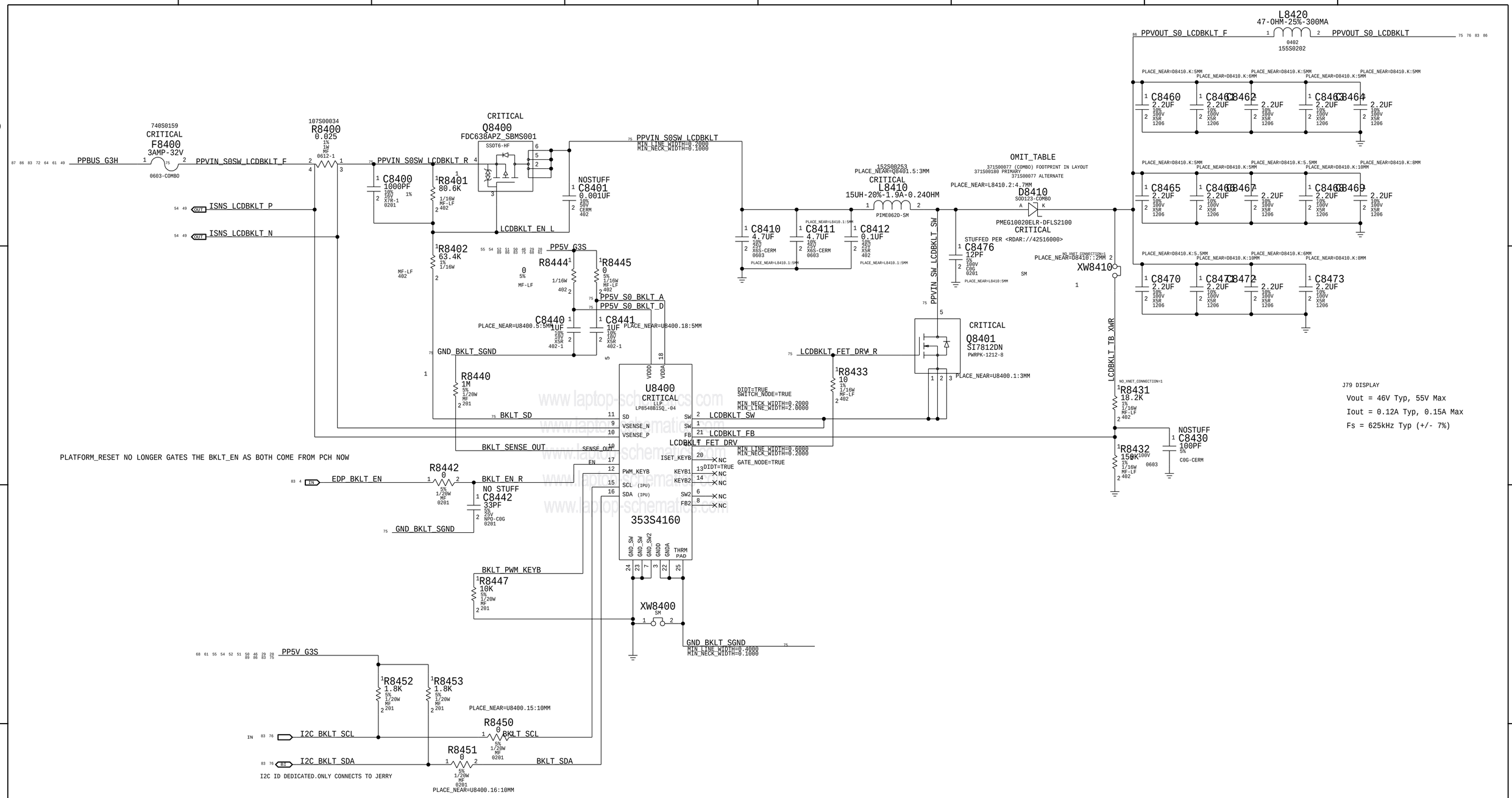

LINE WIDTHS

PP5V_S0_BKLT_A
MIN_LINE_WIDTH=0.2000
MIN_NECK_WIDTH=0.1000

PP5V_S0_BKLT_D
MIN_LINE_WIDTH=0.2000
MIN_NECK_WIDTH=0.1000

BKLT_SD
MIN_LINE_WIDTH=0.2500
MIN_NECK_WIDTH=0.2000

PBUS LINE WIDTHS

PPVIN_S0SW_LCDBKLT_F
MIN_LINE_WIDTH=0.2000
MIN_NECK_WIDTH=0.1000

PPVIN_S0SW_LCDBKLT_R
MIN_LINE_WIDTH=0.2000
MIN_NECK_WIDTH=0.1000

PPVIN_S0SW_LCDBKLT
MIN_LINE_WIDTH=0.2000
MIN_NECK_WIDTH=0.1000

LCD BKLT LINE WIDTHS

LCDBKLT_FET_DRV_R
MIN_LINE_WIDTH=0.6000
MIN_NECK_WIDTH=0.2000
DIDT=TRUE
GATE_NODE=TRUE

PPVIN_SW_LCDBKLT_SW
MIN_LINE_WIDTH=0.2000
MIN_NECK_WIDTH=0.1000
SWITCH_NODE=TRUE
DIDT=TRUE

PPVOUT_S0_LCDBKLT
MIN_LINE_WIDTH=0.2000
MIN_NECK_WIDTH=0.1000

ONLY THE ALTERNATE HAS THE COMBO FOOTPRINT, BOM TABLE NEEDED TO USE ALTERNATE FOOTPRINT
BUT SET PRIMARY APN AS 371S00180

PART#	DESCRIPTION	QTY	REFERENCE DESIGNATOR	CRITICAL	BOM OPTION
371S00180	DIODE,SCHOTTKY,100V,2A,SOD123	1	D8410	CRITICAL	

BOM_COST_GROUP=DISPLAY

SYNC_MASTER=J213_MLB_0P158 SYNC_DATE=05/29/2018

PAGE TITLE
LCD BACKLIGHT DRIVER

Apple Inc.

DRAWING NUMBER 051-04273 SIZE D

REVISION 4.0.0

BRANCH evt-1

PAGE 84 OF 500

SHEET 75 OF 98

NOTICE OF PROPRIETARY PROPERTY:
THE INFORMATION CONTAINED HEREIN IS THE PROPRIETARY PROPERTY OF APPLE INC.
THE POSESSOR AGREES TO THE FOLLOWING:
I TO MAINTAIN THIS DOCUMENT IN CONFIDENCE
II NOT TO REPRODUCE OR COPY IT
III NOT TO REVEAL OR PUBLISH IT IN WHOLE OR PART
IV ALL RIGHTS RESERVED

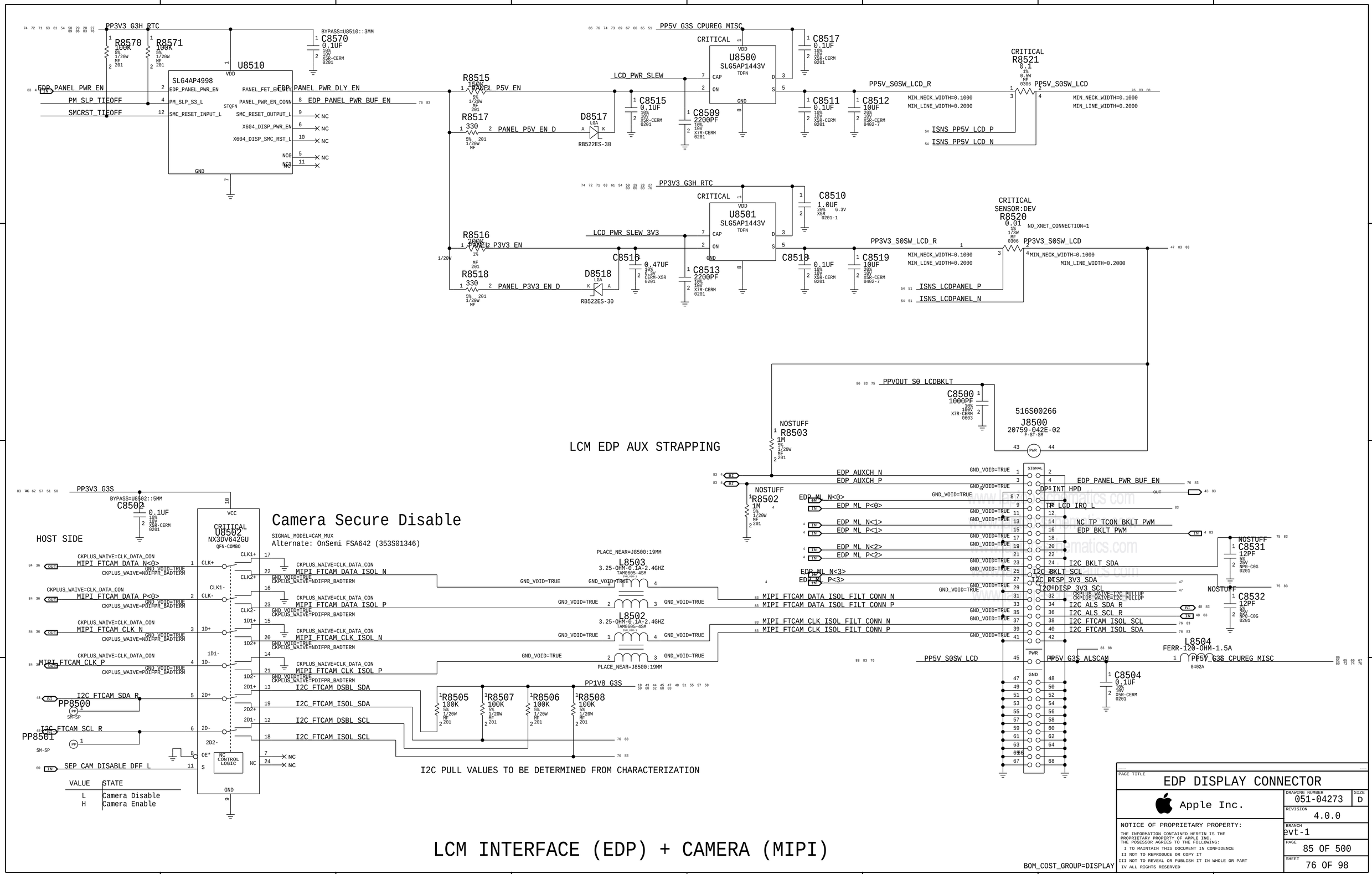
PP3V3_G3H_RTC
R8570 100K 5% 1/20W MF 201
R8571 100K 5% 1/20W MF 201
U8510
SLG4AP4998
EDP_PANEL_PWR_EN
PM_SLP_TIEOFF
SMCRST_TIEOFF
EDP_PANEL_PWR_DLY_EN
EDP_PANEL_PWR_BUF_EN
C8570 0.1UF 10% 10V X5R-CERM 0201
R8515 150K
PANEL_P5V_EN
R8517 330
PANEL_P5V_EN_D
D8517 RB522ES-30
PP5V_G3S_CPUREG_MISC
CRITICAL
U8500 SLG5AP1443V TDFN
LCD_PWR_SLEW
C8515 0.1UF
C8509 2200PF 10% 10V X7R-CERM 0201
C8517 0.1UF
C8511 0.1UF
C8512 10UF 20% 10V X5R-CERM 0402-7
PP5V_S0SW_LCD_R
CRITICAL R8521 0.1 1% 0.5W MF 0306
PP5V_S0SW_LCD
MIN_NECK_WIDTH=0.1000
MIN_LINE_WIDTH=0.2000
ISNS_PP5V_LCD_P
ISNS_PP5V_LCD_N
PP3V3_G3H_RTC
U8501 SLG5AP1443V TDFN
LCD_PWR_SLEW_3V3
R8516 200K 1% MF 201
PANEL_P3V3_EN
R8518 330
PANEL_P3V3_EN_D
D8518 RB522ES-30
C8510 1.0UF 20% 6.3V X5R 0201-1
C8516 0.47UF 10% 6.3V CERM-X5R 0201
C8513 2200PF 10% 10V X7R-CERM 0201
C8518 0.1UF
C8519 10UF 20% 10V X5R-CERM 0402-7
PP3V3_S0SW_LCD_R
CRITICAL SENSOR:DEV R8520 0.01 1% 1/3W MF 0306
NO_XNET_CONNECTION=1
PP3V3_S0SW_LCD
ISNS_LCDPANEL_P
ISNS_LCDPANEL_N
PPVOUT_S0_LCDBKLT
C8500 1000PF 10% 100V X7R-CERM 0603
516S00266
J8500 20759-042E-02 F-ST-SM
LCM EDP AUX STRAPPING
NOSTUFF R8503 1M 5% 1/20W MF 201
NOSTUFF R8502 1M 5% 1/20W MF 201
EDP_AUXCH_N
EDP_AUXCH_P
EDP_ML_N<0>
EDP_ML_P<0>
EDP_ML_N<1>
EDP_ML_P<1>
EDP_ML_N<2>
EDP_ML_P<2>
EDP_ML_N<3>
EDP_ML_P<3>
EDP_PANEL_PWR_BUF_EN
INT_HPD
TP_LCD_IRQ_L
NC_TP_TCON_BKLT_PWM
EDP_BKLT_PWM
I2C_BKLT_SDA
I2C_BKLT_SCL
I2C_DISP_3V3_SDA
I2C_DISP_3V3_SCL
I2C_ALS_SDA_R
I2C_ALS_SCL_R
I2C_FTCAM_ISOL_SCL
I2C_FTCAM_ISOL_SDA
NOSTUFF C8531 12PF 5% 25V NP0-C0G 0201
NOSTUFF C8532 12PF 5% 25V NP0-C0G 0201
L8504 FERR-120-OHM-1.5A 0402A
PP5V_G3S_ALSCAM
PP5V_G3S_CPUREG_MISC
C8504 0.1UF
PP5V_S0SW_LCD
PP3V3_G3S
C8502 0.1UF 10% 10V X5R-CERM 0201
HOST SIDE
Camera Secure Disable
SIGNAL_MODEL=CAM_MUX
Alternate: OnSemi FSA642 (353S01346)
U8502 NX3DV642GU QFN-COMBO
MIPI_FTCAM_DATA_N<0>
MIPI_FTCAM_DATA_P<0>
MIPI_FTCAM_CLK_N
MIPI_FTCAM_CLK_P
I2C_FTCAM_SDA_R
I2C_FTCAM_SCL_R
PP8500
PP8501
SEP_CAM_DISABLE_DFF_L
MIPI_FTCAM_DATA_ISOL_N
MIPI_FTCAM_DATA_ISOL_P
MIPI_FTCAM_CLK_ISOL_N
MIPI_FTCAM_CLK_ISOL_P
I2C_FTCAM_DSBL_SDA
I2C_FTCAM_ISOL_SDA
I2C_FTCAM_DSBL_SCL
I2C_FTCAM_ISOL_SCL
L8503 3.25-OHM-0.1A-2.4GHZ TAM0605-4SM
L8502 3.25-OHM-0.1A-2.4GHZ TAM0605-4SM
PLACE_NEAR=J8500:19MM
MIPI_FTCAM_DATA_ISOL_FILT_CONN_N
MIPI_FTCAM_DATA_ISOL_FILT_CONN_P
MIPI_FTCAM_CLK_ISOL_FILT_CONN_N
MIPI_FTCAM_CLK_ISOL_FILT_CONN_P
PP1V8_G3S
R8505 100K
R8507 100K
R8506 100K
R8508 100K
I2C PULL VALUES TO BE DETERMINED FROM CHARACTERIZATION
VALUE STATE
L Camera Disable
H Camera Enable
LCM INTERFACE (EDP) + CAMERA (MIPI)
BOM_COST_GROUP=DISPLAY
PAGE TITLE
EDP DISPLAY CONNECTOR
Apple Inc.
DRAWING NUMBER 051-04273
SIZE D
REVISION 4.0.0
BRANCH evt-1
PAGE 85 OF 500
SHEET 76 OF 98
NOTICE OF PROPRIETARY PROPERTY:
THE INFORMATION CONTAINED HEREIN IS THE PROPRIETARY PROPERTY OF APPLE INC.
THE POSESSOR AGREES TO THE FOLLOWING:
I TO MAINTAIN THIS DOCUMENT IN CONFIDENCE
II NOT TO REPRODUCE OR COPY IT
III NOT TO REVEAL OR PUBLISH IT IN WHOLE OR PART
IV ALL RIGHTS RESERVED

S4E0

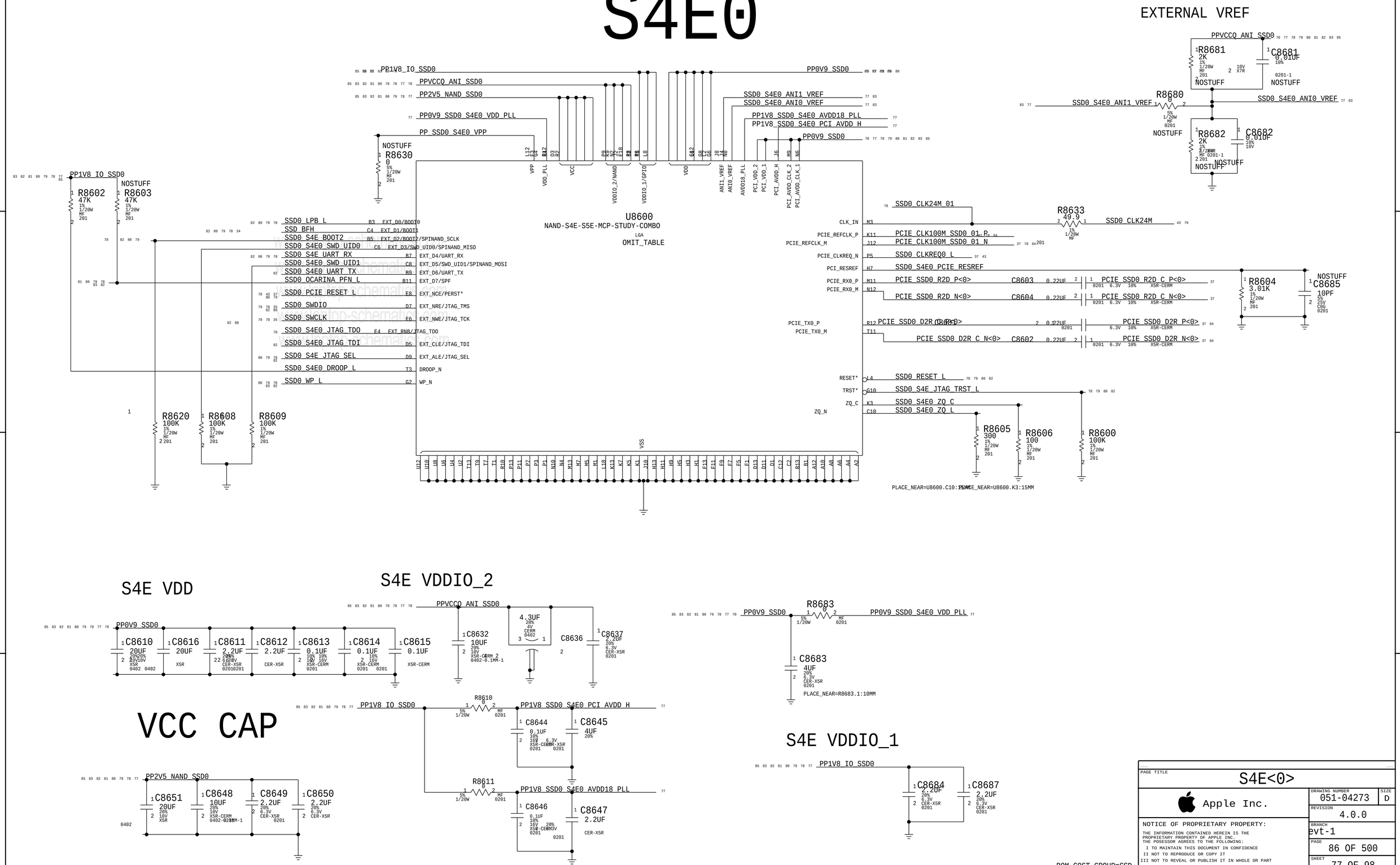

PAGE TITLE	S4E<0>
	Apple Inc.
DRAWING NUMBER	051-04273
SIZE	D
REVISION	4.0.0
BRANCH	evt-1
PAGE	86 OF 500
SHEET	77 OF 98

NOTICE OF PROPRIETARY PROPERTY:
THE INFORMATION CONTAINED HEREIN IS THE PROPRIETARY PROPERTY OF APPLE INC.
THE POSESSOR AGREES TO THE FOLLOWING:
I TO MAINTAIN THIS DOCUMENT IN CONFIDENCE
II NOT TO REPRODUCE OR COPY IT
III NOT TO REVEAL OR PUBLISH IT IN WHOLE OR PART
IV ALL RIGHTS RESERVED

S4E1

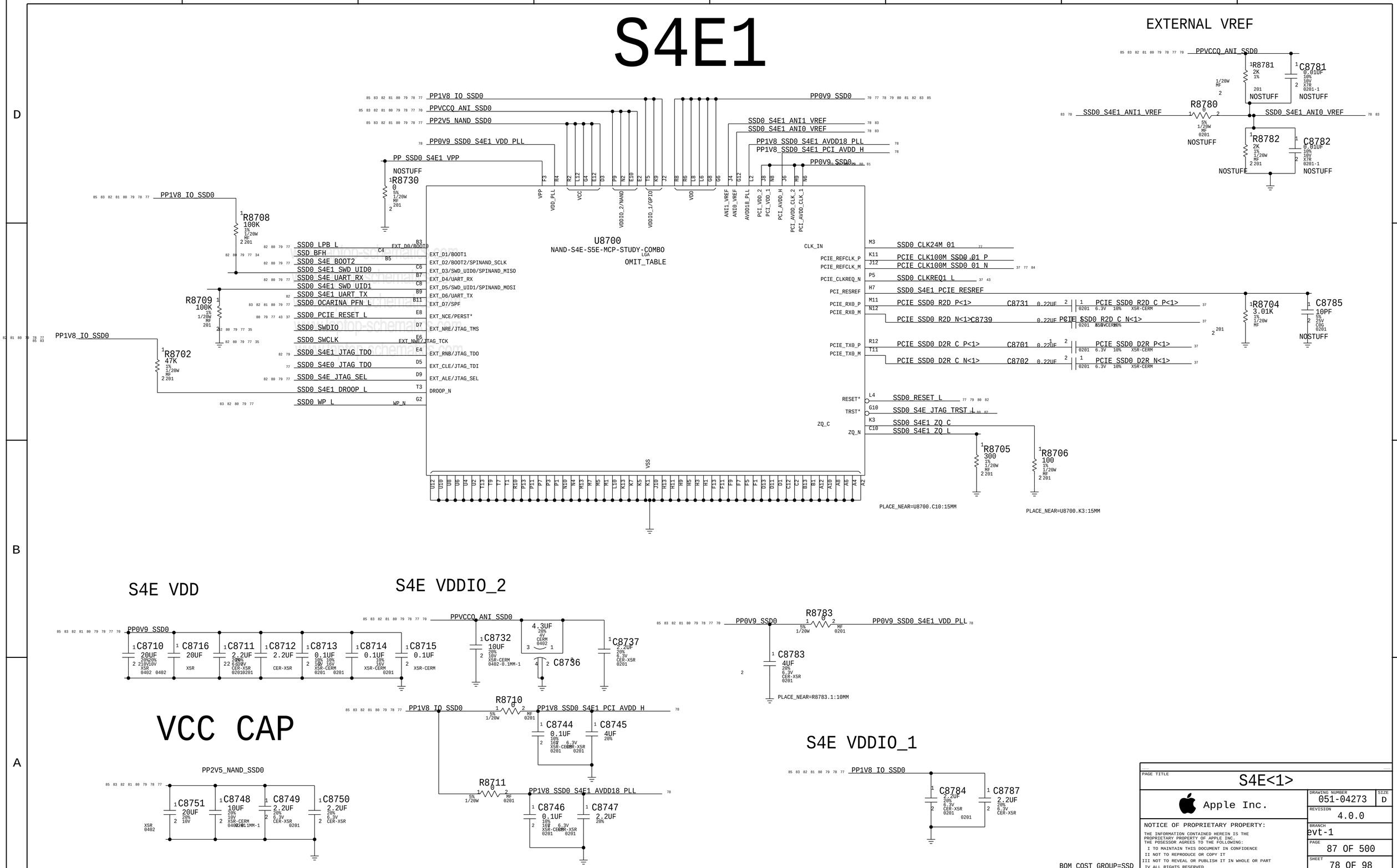

PAGE TITLE
S4E<1>

Apple Inc.

DRAWING NUMBER 051-04273 SIZE D
REVISION 4.0.0
BRANCH evt-1
PAGE 87 OF 500
SHEET 78 OF 98

NOTICE OF PROPRIETARY PROPERTY:
THE INFORMATION CONTAINED HEREIN IS THE PROPRIETARY PROPERTY OF APPLE INC.
THE POSESSOR AGREES TO THE FOLLOWING:
I TO MAINTAIN THIS DOCUMENT IN CONFIDENCE
II NOT TO REPRODUCE OR COPY IT
III NOT TO REVEAL OR PUBLISH IT IN WHOLE OR PART
IV ALL RIGHTS RESERVED

S4E2

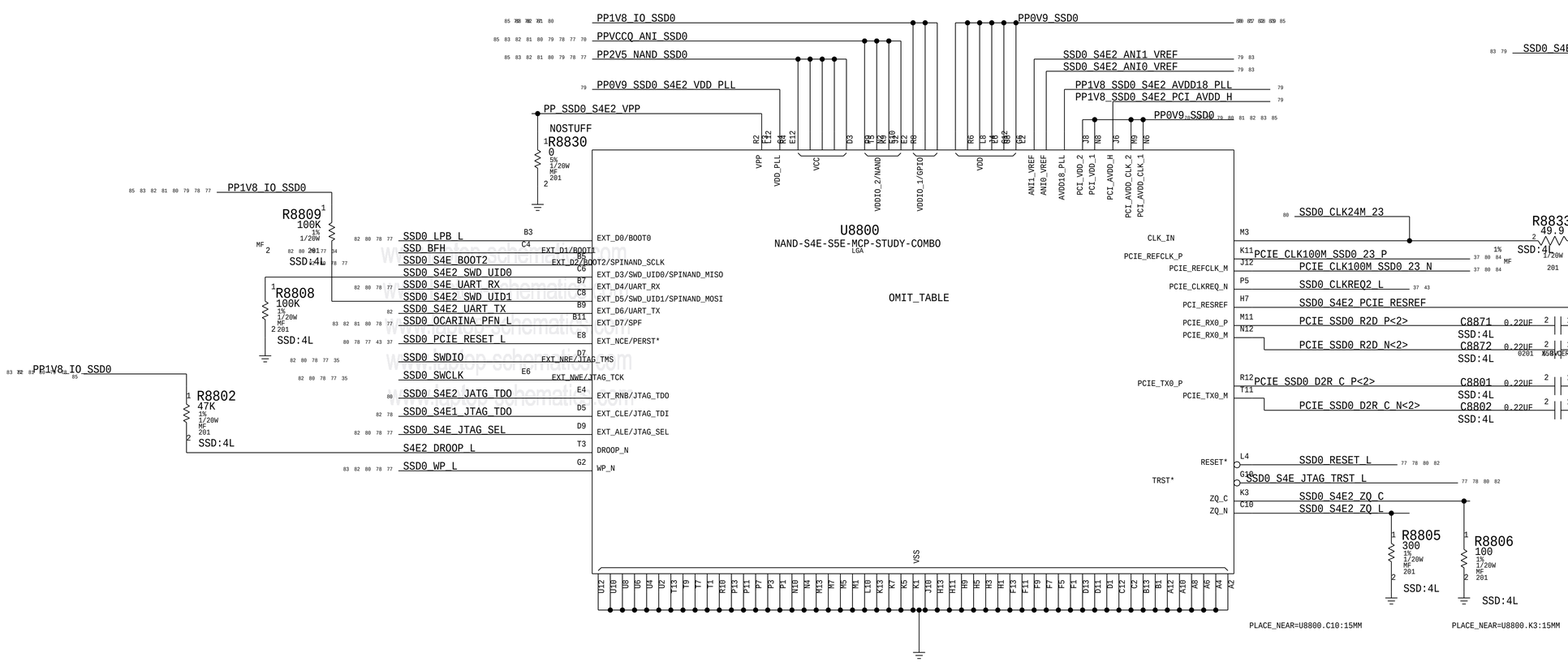

EXTERNAL VREF

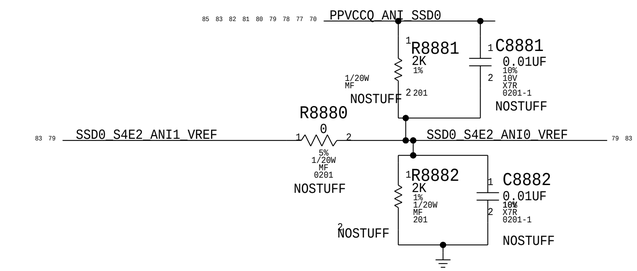

S4E VDD

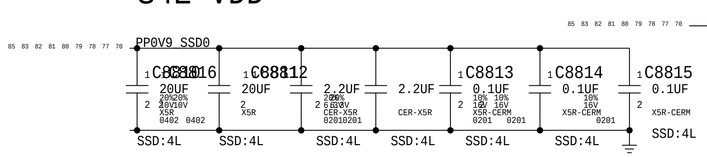

S4E VDDIO_2

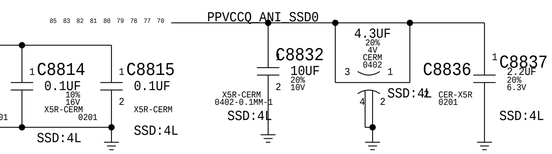

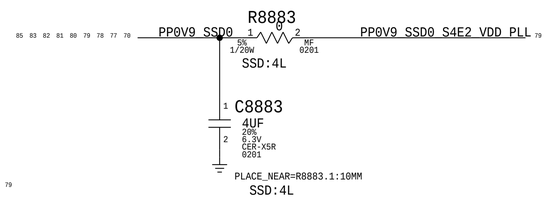

VCC CAP

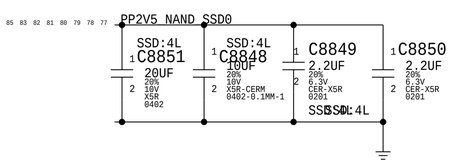

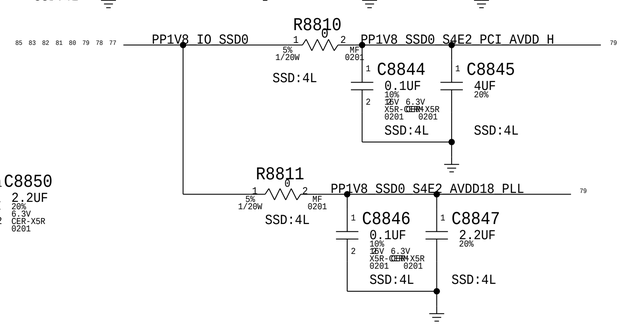

S4E VDDIO_1

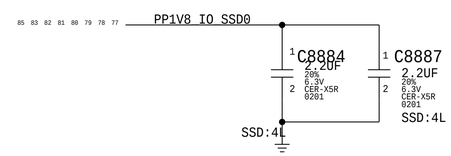

BOM_COST_GROUP=SSD

PAGE TITLE	S4E<2>
Apple Inc.	DRAWING NUMBER 051-04273 SIZE D
	REVISION 4.0.0
	BRANCH evt-1
	PAGE 88 OF 500
	SHEET 79 OF 98

NOTICE OF PROPRIETARY PROPERTY:
THE INFORMATION CONTAINED HEREIN IS THE PROPRIETARY PROPERTY OF APPLE INC.
THE POSESSOR AGREES TO THE FOLLOWING:
I TO MAINTAIN THIS DOCUMENT IN CONFIDENCE
II NOT TO REPRODUCE OR COPY IT
III NOT TO REVEAL OR PUBLISH IT IN WHOLE OR PART
IV ALL RIGHTS RESERVED

S4E3

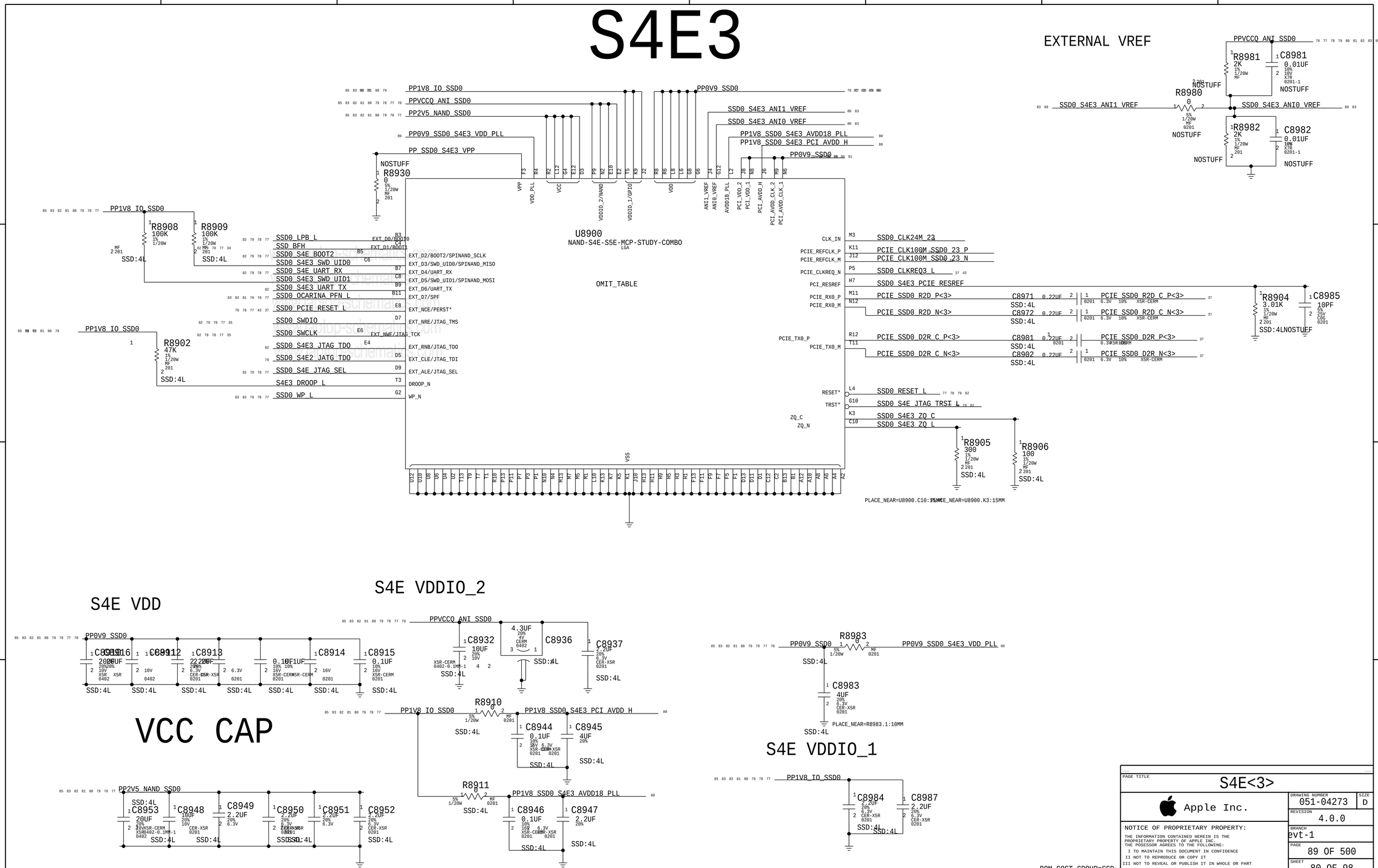

PAGE TITLE	S4E<3>
Apple Inc.	DRAWING NUMBER 051-04273 SIZE D
	REVISION 4.0.0
NOTICE OF PROPRIETARY PROPERTY: THE INFORMATION CONTAINED HEREIN IS THE PROPRIETARY PROPERTY OF APPLE INC. THE POSESSOR AGREES TO THE FOLLOWING: I TO MAINTAIN THIS DOCUMENT IN CONFIDENCE II NOT TO REPRODUCE OR COPY IT III NOT TO REVEAL OR PUBLISH IT IN WHOLE OR PART IV ALL RIGHTS RESERVED	BRANCH evt-1
	PAGE 89 OF 500
	SHEET 80 OF 98

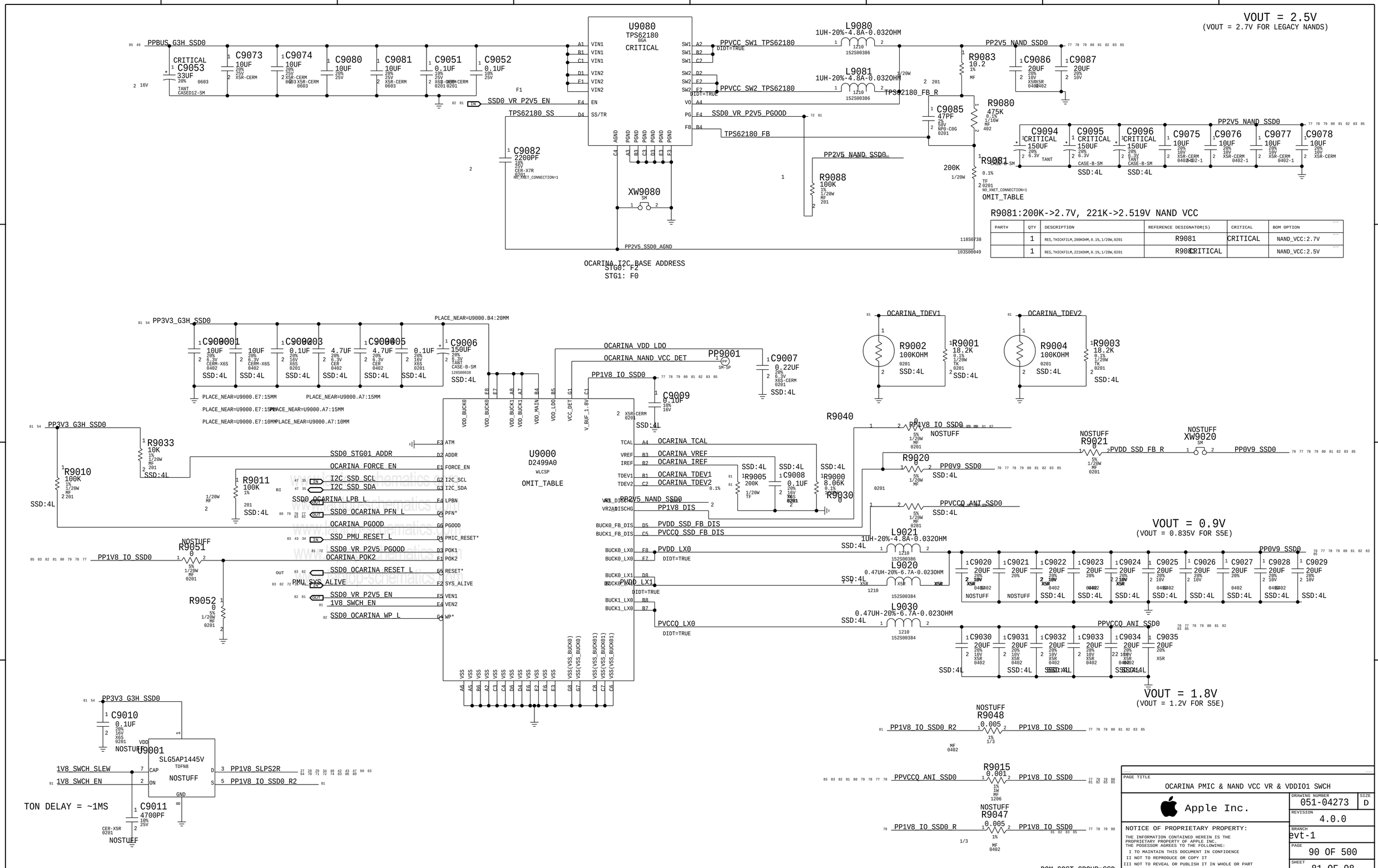
VOUT = 2.5V
(VOUT = 2.7V FOR LEGACY NANDS)
U9080
TPS62180
BGA
CRITICAL
PPBUS_G3H_SSD0
C9053 33UF TANT CASED12-SM
C9073 10UF X5R-CERM 0603
C9074 10UF X5R-CERM 0603
C9080 10UF X5R-CERM 0603
C9081 10UF X5R-CERM 0603
C9051 0.1UF X6S-CERM 0201
C9052 0.1UF X6S-CERM 0201
SSD0_VR_P2V5_EN
TPS62180_SS
C9082 2200PF CER-X7R 0201
XW9080 SM
PP2V5_SSD0_AGND
OCARINA I2C BASE ADDRESS
STG0: F2
STG1: F0
PPVCC_SW1_TPS62180
L9080 1UH-20%-4.8A-0.032OHM 1210 152S00386
PPVCC_SW2_TPS62180
L9081 1UH-20%-4.8A-0.032OHM 1210 152S00386
TPS62180_FB_R
SSD0_VR_P2V5_PGOOD
TPS62180_FB
R9088 100K 1% 1/20W MF 201
PP2V5_NAND_SSD0
R9083 10.2 1% MF
C9086 20UF 10V X5R/X5R 0402
C9087 20UF 10V
C9085 47PF 5% 50V NP0-C0G 0201
R9080 475K 0.1% 1/16W MF 402
R9081 200K 0.1% 1/20W TF 0201 NO_XNET_CONNECTION=1
OMIT_TABLE
C9094 CRITICAL 150UF TANT CASE-B-SM
C9095 CRITICAL 150UF CASE-B-SM SSD:4L
C9096 CRITICAL 150UF TANT CASE-B-SM SSD:4L
C9075 10UF X5R-CERM 0402-1
C9076 10UF X5R-CERM 0402-1
C9077 10UF X5R-CERM 0402-1
C9078 10UF X5R-CERM
R9081:200K->2.7V, 221K->2.519V NAND VCC
PP3V3_G3H_SSD0
C900001 10UF CERM-X6S 0402 SSD:4L
C900003 0.1UF X6S 0201 SSD:4L
C900004 4.7UF CER 0402 SSD:4L
C900005 0.1UF X6S 0201 SSD:4L
C9006 150UF TANT CASE-B-SM SSD:4L
PLACE_NEAR=U9000.B4:20MM
PLACE_NEAR=U9000.E7:15MM
PLACE_NEAR=U9000.A7:15MM
PLACE_NEAR=U9000.E7:10MM
OCARINA_VDD_LDO
OCARINA_NAND_VCC_DET
PP9001
C9007 0.22UF X6S-CERM 0201 SSD:4L
PP1V8_IO_SSD0
C9009 0.1UF X5R-CERM 0201 SSD:4L
OCARINA_TDEV1
OCARINA_TDEV2
R9002 100KOHM 0201 SSD:4L
R9001 18.2K 0.1% 1/20W TK 0201 SSD:4L
R9004 100KOHM 0201 SSD:4L
R9003 18.2K 0.1% 1/20W TK 0201 SSD:4L
R9033 10K 1% 1/20W MF 201 SSD:4L
R9010 100K 1% 1/20W MF 201 SSD:4L
R9011 100K 1% 1/20W MF 201 SSD:4L
SSD0_STG01_ADDR
OCARINA_FORCE_EN
I2C_SSD_SCL
I2C_SSD_SDA
SSD0_OCARINA_LPB_L
SSD0_OCARINA_PFN_L
OCARINA_PGOOD
SSD_PMU_RESET_L
SSD0_VR_P2V5_PGOOD
OCARINA_POK2
SSD0_OCARINA_RESET_L
PMU_SYS_ALIVE
SSD0_VR_P2V5_EN
1V8_SWCH_EN
SSD0_OCARINA_WP_L
U9000
D2499A0
WLCSP
OMIT_TABLE
OCARINA_TCAL
OCARINA_VREF
OCARINA_IREF
OCARINA_TDEV1
OCARINA_TDEV2
PP2V5_NAND_SSD0
PP1V8_DIS
PVDD_SSD_FB_DIS
PVCCQ_SSD_FB_DIS
PVDD_LX0
PVDD_LX1
PVCCQ_LX0
R9005 200K 1/20W TF
C9008 0.1UF X6S 0201
R9000 8.06K 0.1% 1/20W TF 0201
R9030 0 5% 1/20W MF 0201
R9040 0 5% 1/20W MF 0201
PP1V8_IO_SSD0
NOSTUFF
R9021 0 5% 1/20W MF 0201
PVDD_SSD_FB_R
NOSTUFF XW9020 SM
PP0V9_SSD0
R9020 0 5% 1/20W MF 0201
PPVCCQ_ANI_SSD0
L9021 1UH-20%-4.8A-0.032OHM 1210 152S00386
L9020 0.47UH-20%-6.7A-0.023OHM 1210 152S00384
L9030 0.47UH-20%-6.7A-0.023OHM 1210 152S00384
C9020 20UF 0402
C9021 20UF 0402
C9022 20UF 0402
C9023 20UF 0402
C9024 20UF 0402
C9025 20UF 0402
C9026 20UF 0402
C9027 20UF 0402
C9028 20UF 0402
C9029 20UF 0402
C9030 20UF 0402
C9031 20UF 0402
C9032 20UF 0402
C9033 20UF 0402
C9034 20UF 0402
C9035 20UF X5R
VOUT = 0.9V
(VOUT = 0.835V FOR S5E)
VOUT = 1.8V
(VOUT = 1.2V FOR S5E)
NOSTUFF R9048 0.005 1% 1/3 MF 0402
PP1V8_IO_SSD0_R2
R9015 0.001 1% 1W MF 1206
PPVCCQ_ANI_SSD0
NOSTUFF R9047 0.005 1% MF 0402
PP1V8_IO_SSD0_R
BOM_COST_GROUP=SSD
C9010 0.1UF X6S 0201
NOSTUFF
U9001
SLG5AP1445V
TDFN8
1V8_SWCH_SLEW
1V8_SWCH_EN
PP1V8_SLPS2R
PP1V8_IO_SSD0_R2
TON DELAY = ~1MS
C9011 4700PF CER-X5R 0201
PAGE TITLE
OCARINA PMIC & NAND VCC VR & VDDIO1 SWCH
Apple Inc.
DRAWING NUMBER 051-04273
SIZE D
REVISION 4.0.0
BRANCH evt-1
PAGE 90 OF 500
SHEET 81 OF 98
NOTICE OF PROPRIETARY PROPERTY:
THE INFORMATION CONTAINED HEREIN IS THE PROPRIETARY PROPERTY OF APPLE INC.
THE POSESSOR AGREES TO THE FOLLOWING:
I TO MAINTAIN THIS DOCUMENT IN CONFIDENCE
II NOT TO REPRODUCE OR COPY IT
III NOT TO REVEAL OR PUBLISH IT IN WHOLE OR PART
IV ALL RIGHTS RESERVED

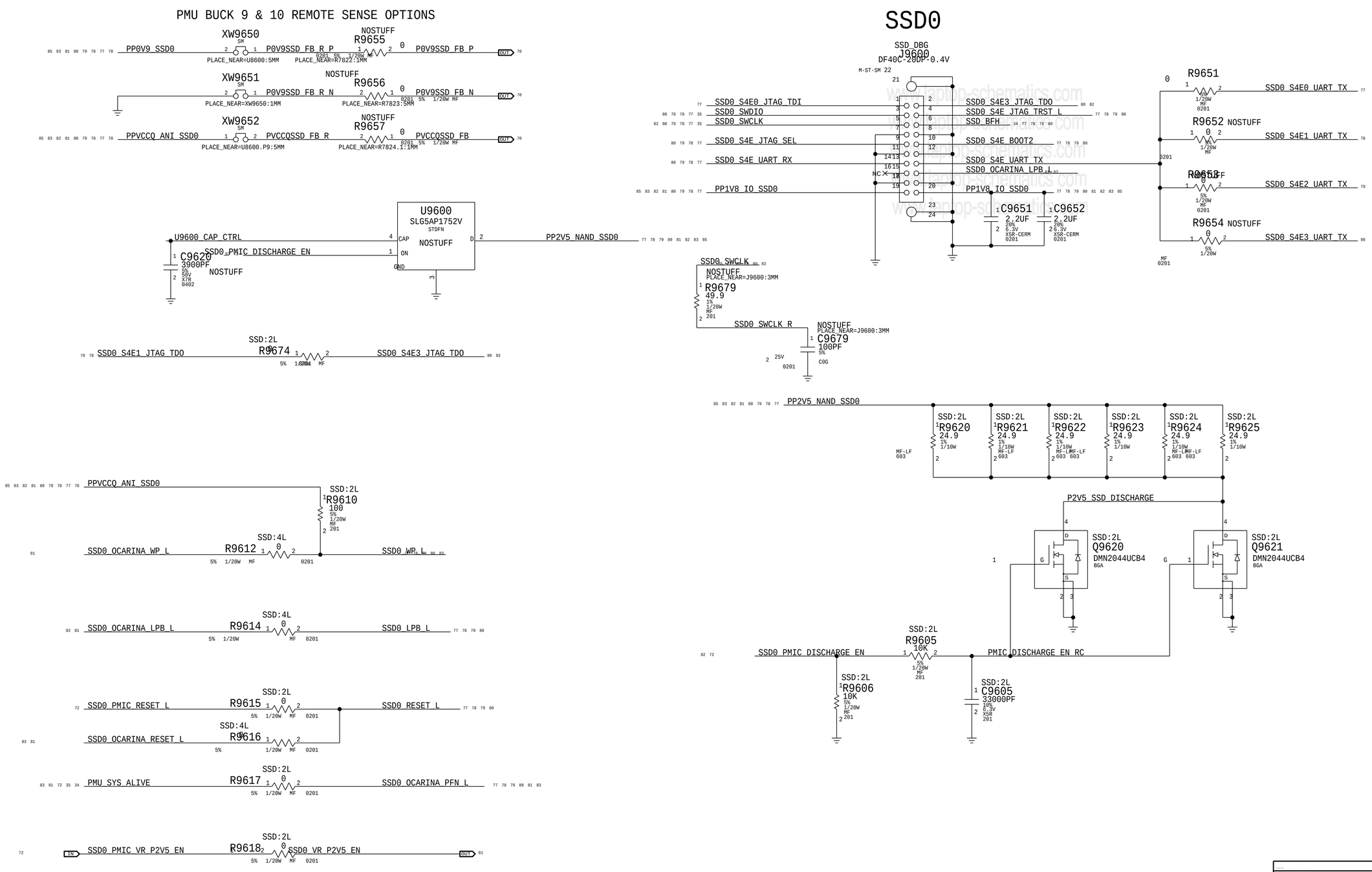

BOM_COST_GROUP=SSD

PAGE TITLE
SSD SUPPORT

Apple Inc.

DRAWING NUMBER 051-04273 | SIZE D
REVISION 4.0.0
BRANCH evt-1
PAGE 96 OF 500
SHEET 82 OF 98

NOTICE OF PROPRIETARY PROPERTY:
THE INFORMATION CONTAINED HEREIN IS THE PROPRIETARY PROPERTY OF APPLE INC.
THE POSESSOR AGREES TO THE FOLLOWING:
I TO MAINTAIN THIS DOCUMENT IN CONFIDENCE
II NOT TO REPRODUCE OR COPY IT
III NOT TO REVEAL OR PUBLISH IT IN WHOLE OR PART
IV ALL RIGHTS RESERVED

Functional Test Points

J5110 - DFR Display Connector

46	DFR DISP VSYNC	FUNC_TEST=TRUE
46 36	DFR DISP TE	FUNC_TEST=TRUE
46 34	DFR DISP INT	FUNC_TEST=TRUE
46 36	DFR DISP RESET L	FUNC_TEST=TRUE
46	PP3V3 G3HSW DFR	FUNC_TEST=TRUE
46	MIPI DFR CLK FILT CONN P	FUNC_TEST=TRUE
46	MIPI DFR CLK FILT CONN N	FUNC_TEST=TRUE
46	MIPI DFR DATA FILT CONN P	FUNC_TEST=TRUE
46	MIPI DFR DATA FILT CONN N	FUNC_TEST=TRUE
87 48 46	PP1V8 DFR	FUNC_TEST=TRUE
48 46	I2C DFR SCL R	FUNC_TEST=TRUE
48 46	I2C DFR SDA R	FUNC_TEST=TRUE
	GND	FUNC_TEST=TRUE

3 TPS; 4 TPS; 6 TPS

J5100 - DFR Touch Connector

46	DFR TOUCH LID OPEN L	FUNC_TEST=TRUE
46 36	DFR TOUCH RESET L	FUNC_TEST=TRUE
46 34	DFR PWR EN	FUNC_TEST=TRUE
46	TP DFR TOUCH GPIO2	FUNC_TEST=TRUE
46	PP5V G3S DFR FILT	FUNC_TEST=TRUE
46 36	SPI DFR CS L	FUNC_TEST=TRUE
46 43	SPI DFR MOSI	FUNC_TEST=TRUE
46 43	SPI DFR MISO R	FUNC_TEST=TRUE
46 43	SPI DFR CLK	FUNC_TEST=TRUE
46 35	DFR TOUCH INT L	FUNC_TEST=TRUE
46 36	DFR TOUCH CLK32K RESET L	FUNC_TEST=TRUE
46	TP DFR TOUCH PANEL DETECT	FUNC_TEST=TRUE
46	TP DFR TOUCH ROM WC	FUNC_TEST=TRUE
	GND	FUNC_TEST=TRUE

1 TPS; 6 TPS

J6700 - Keyboard Connector

61	GND FAN	FUNC_TEST=TRUE
61	PP5V G3S FAN CONN	FUNC_TEST=TRUE
61 55	FAN RT TACH	FUNC_TEST=TRUE
61 55	FAN RT PWM	FUNC_TEST=TRUE
85 61 52	PP5V G3S KBD	FUNC_TEST=TRUE
61	KBD BLC GSSOUT	FUNC_TEST=TRUE
61	KBD BLC GSLAT	FUNC_TEST=TRUE
61	KBD BLC GSSIN	FUNC_TEST=TRUE
61	KBD BLC GSSCK	FUNC_TEST=TRUE
61	KBD BLC XBLANK	FUNC_TEST=TRUE
61	I2C KBD SDA	FUNC_TEST=TRUE
61	I2C KBD SCL	FUNC_TEST=TRUE
61	KBD INT L	FUNC_TEST=TRUE
72 63 61 89	PMU RSLOC RST L	FUNC_TEST=TRUE
	GND	FUNC_TEST=TRUE

3 TPS; 6 TPS

J6701 - Trackpad Connector

	ACT GND	
61	PPVIN S4 TPAD FUSE	FUNC_TEST=TRUE
61	PP5V G3S TPAD CONN	FUNC_TEST=TRUE
61 51	PP3V3 G3S TPAD	FUNC_TEST=TRUE
62 61	I2C TPAD 3V3 SDA	FUNC_TEST=TRUE
62 61	I2C TPAD 3V3 SCL	FUNC_TEST=TRUE
85 62 61	SPI TPAD 3V3 CLK	FUNC_TEST=TRUE
62 61	SPI TPAD 3V3 MISO	FUNC_TEST=TRUE
62 61	SPI TPAD 3V3 CS L	FUNC_TEST=TRUE
62 61	SPI TPAD 3V3 MOSI	FUNC_TEST=TRUE
62 61	TPAD 3V3 SPI EN	FUNC_TEST=TRUE
62 61	TPAD 3V3 SPI INT L	FUNC_TEST=TRUE
62 61	TPAD 3V3 ACTUATOR DISABLE L	FUNC_TEST=TRUE
62 61 35	TPAD KBD WAKE L	FUNC_TEST=TRUE
	GND	FUNC_TEST=TRUE

2 TPS; 3 TPS; 6 TPS

J4900 - Mesa Connector

	PP3V0 MESA FILT CONN	
	PP1V8 MESA FILT CONN	
60 44	PP1V8 MESA FILT CONN	FUNC_TEST=TRUE
60 44	SPI MESA MISO CONN	FUNC_TEST=TRUE
60 44	SPI MESA MOSI CONN	FUNC_TEST=TRUE
60 44	SPI MESA CLK CONN	FUNC_TEST=TRUE
60 44	MESA INT CONN	FUNC_TEST=TRUE
60 44	MESA BOOST EN CONN	FUNC_TEST=TRUE
89 60 44	PMU ONOFF R L CONN	FUNC_TEST=TRUE
	GND	FUNC_TEST=TRUE

1 TPS; 2 TPS; 6 TPS

J6640 - MIC Connector

60 43	PDM DMIC CLK0	FUNC_TEST=TRUE
60	AUD DMIC0 DATA CONN	FUNC_TEST=TRUE
	PP1V8 DMIC	
	PDM DMIC CLK1	
60	AUD DMIC1 DATA CONN	FUNC_TEST=TRUE
	GND	FUNC_TEST=TRUE

1 TPS

J6410 - REAR LEFT CONNECTOR

58	SPKRCONN RL OUTP	FUNC_TEST=TRUE
58	SPKRCONN RL OUTN	FUNC_TEST=TRUE
58 36	SPKR ID0	FUNC_TEST=TRUE
	GND	FUNC_TEST=TRUE

2 TPS

J6410 - FRONT LEFT CONNECTOR

58	SPKRCONN FL OUTP	FUNC_TEST=TRUE
58	SPKRCONN FL OUTN	FUNC_TEST=TRUE
	GND	FUNC_TEST=TRUE

2 TPS

J6510 - REAR RIGHT CONNECTOR

59	SPKRCONN RR OUTP	FUNC_TEST=TRUE
59	SPKRCONN RR OUTN	FUNC_TEST=TRUE
59 30	SPKR ID1	FUNC_TEST=TRUE
	GND	FUNC_TEST=TRUE

2 TPS

J6550 - FRONT RIGHT CONNECTOR

59	SPKRCONN FR OUTP	FUNC_TEST=TRUE
59	SPKRCONN FR OUTN	FUNC_TEST=TRUE
	GND	FUNC_TEST=TRUE

2 TPS

J6600 - Audio Jack Connector

60	AUD CONN HP LEFT	FUNC_TEST=TRUE
60	AUD CONN HP RIGHT	FUNC_TEST=TRUE
60	AUD CONN RING2	FUNC_TEST=TRUE
	AUD CONN SLEEVE	
	AUD CONN HP SENSE L	
	AUD CONN HP SENSE R	
60	AUD CONN TIP SENSE	FUNC_TEST=TRUE
60	AUD CONN RING SENSE	FUNC_TEST=TRUE
60	AUD CONN SLEEVE XW	FUNC_TEST=TRUE
60	AUD CONN RING2 XW	FUNC_TEST=TRUE
	GND	FUNC_TEST=TRUE

2 TPS

J6950 - Battery Connector

64 63	PPVBAT G3H CONN	FUNC_TEST=TRUE
	GND	FUNC_TEST=TRUE

8 TPS

J6951 - BATTERY SENSE CONNECTOR

86 63	SYS DETECT L	FUNC_TEST=TRUE
	SYS DETECT	
63	SMBUS 3V3 BATT SCL	FUNC_TEST=TRUE
63	SMBUS 3V3 BATT SDA	FUNC_TEST=TRUE
74 72 50 49	SENSOR PWR EN	FUNC_TEST=TRUE
	GND	FUNC_TEST=TRUE

1 TPS

Hall Effect

43 35	SMC LID LEFT	FUNC_TEST=TRUE
43 35	SMC LID RIGHT	FUNC_TEST=TRUE
61 46 43	IPD LID OPEN	FUNC_TEST=TRUE
	GND	FUNC_TEST=TRUE

1 TPS

J8500 - eDP Connector

86 76 75	PPVOUT S0 LCDBKLT	FUNC_TEST=TRUE
76	I2C FTCAM ISOL SCL	FUNC_TEST=TRUE
76	I2C FTCAM ISOL SDA	FUNC_TEST=TRUE
76 48	I2C ALS SCL R	FUNC_TEST=TRUE
76 48	I2C ALS SDA R	FUNC_TEST=TRUE
47	I2C DISP SCL	FUNC_TEST=TRUE
47	I2C DISP SDA	
76 75	I2C BKLT SCL	FUNC_TEST=TRUE
76 75	I2C BKLT SDA	FUNC_TEST=TRUE
76 4	EDP BKLT PWM	FUNC_TEST=TRUE
75 4	EDP BKLT EN	FUNC_TEST=TRUE
76 4	EDP PANEL PWR EN	FUNC_TEST=TRUE
	TP LCD IRQ L	FUNC_TEST=TRUE
76 43	DP INT HPD	FUNC_TEST=TRUE
76	EDP PANEL PWR BUF EN	FUNC_TEST=TRUE
88 76	PP3V3 S0SW LCD	FUNC_TEST=TRUE
88	PP5V S0SW LCD	FUNC_TEST=TRUE
88 76	PP5V G3S ALSCAM	FUNC_TEST=TRUE
76	MIPI FTCAM CLK ISOL FILT CONN P	FUNC_TEST=TRUE
76	MIPI FTCAM CLK ISOL FILT CONN N	FUNC_TEST=TRUE
76	MIPI FTCAM DATA ISOL FILT CONN P	FUNC_TEST=TRUE
76	MIPI FTCAM DATA ISOL FILT CONN N	FUNC_TEST=TRUE
	EDP AUXCH P	FUNC_TEST=TRUE
76 4	EDP AUXCH N	FUNC_TEST=TRUE
	GND	FUNC_TEST=TRUE

1 TPS; 12 TPS

J3300 - Left USB-C Connector

87 30 28 27	PP20V USBC XA VBUS	FUNC_TEST=TRUE
30 28	USBC XA CC1	FUNC_TEST=TRUE
	USBC XA CC2	FUNC_TEST=TRUE
30 28	USBC XA SBU1	FUNC_TEST=TRUE
30 28	USBC XA SBU2	FUNC_TEST=TRUE
87 30 29	PP20V USBC XB VBUS	FUNC_TEST=TRUE
30 29	USBC XB CC1	FUNC_TEST=TRUE
30 29	USBC XB CC2	FUNC_TEST=TRUE
30 29	USBC XB SBU1	FUNC_TEST=TRUE
30 29	USBC XB SBU2	FUNC_TEST=TRUE
	TP USBC PP20V XA	FUNC_TEST=TRUE
30	TP USBC PP20V XB	FUNC_TEST=TRUE
89 28	USB SOC TYPEC P	FUNC_TEST=TRUE
89 28	USB SOC TYPEC N	FUNC_TEST=TRUE
	GND	FUNC_TEST=TRUE

48 TPS

PROBE BLOCK GRID - DFU/SOC/DCI

14	TP USB3 EXTC R2D C N	
14	TP USB FIXT1 N	
14	TP USB3 EXTC D2R N	
14	TP USB3 EXTC R2D C P	
14	TP USB FIXT1 P	
14	TP USB3 EXTC D2R C P	
	GND	FUNC_TEST=TRUE

JC400 SWDL OMIT SM-TP-0.5MM

1	USB3_D2R_P	USB3_D2R_N	2
3	GND	GND	4
5	USB2_D_P	USB2_D_N	6
7	GND	GND	8
9	USB3_R2D_P	USB3_R2D_N	10

14	USB3 EXTD R2D C N	
14	TP USB FIXT2 N	
89	USB3 EXTD D2R N	
89 14	USB3 EXTD D2R P	
14	TP USB FIXT2 P	
89 14	USB3 EXTD R2D C P	
	GND	FUNC_TEST=TRUE

JC410 SWDL OMIT SM-TP-0.5MM

1	USB3_D2R_P	USB3_D2R_N	2
3	GND	GND	4
5	USB2_D_P	USB2_D_N	6
7	GND	GND	8
9	USB3_R2D_P	USB3_R2D_N	10

29 27	USB3 BSSB D2R R P	FUNC_TEST=TRUE
29 27	USB3 BSSB D2R R N	FUNC_TEST=TRUE
29 27	USB3 BSSB R2D P	FUNC_TEST=TRUE
29 27	USB3 BSSB R2D N	FUNC_TEST=TRUE
	GND	FUNC_TEST=TRUE

12 TPS

DFU/SOC/FCT DEBUG

89 34 27	SOC USB VBUS	FUNC_TEST=TRUE
89 72 34 28	SOC FORCE DFU	FUNC_TEST=TRUE
89 34 28	SOC DFU STATUS	FUNC_TEST=TRUE
35 29 28	SOC DOCK CONNECT	FUNC_TEST=TRUE
89	DFUMUX SEL	FUNC_TEST=TRUE
	SOC SWD MUX SEL PCH	FUNC_TEST=TRUE
	SOC COLD RESET L	FUNC_TEST=TRUE
89 34	USB SOC N	FUNC_TEST=TRUE
89 34	USB SOC P	FUNC_TEST=TRUE
89 27 12	PCH UART DEBUG R2D	FUNC_TEST=TRUE
89 27 12	PCH UART DEBUG D2R	FUNC_TEST=TRUE
29 27	SWD SOC SWCLK XB	FUNC_TEST=TRUE
29 27	SWD SOC SWDIO XB	FUNC_TEST=TRUE
89 35	DEBUG JTAG SOC TDI	FUNC_TEST=TRUE
89 35	DEBUG JTAG SOC TDO	FUNC_TEST=TRUE
	TP JTAG SOC TRST L	FUNC_TEST=TRUE
	SMC DEBUGPRT TX	FUNC_TEST=TRUE
89 35	SMC DEBUGPRT RX	FUNC_TEST=TRUE
89 36	SOC DEBUGPRT TX	FUNC_TEST=TRUE
89 36	SOC DEBUGPRT RX	FUNC_TEST=TRUE
72 47 35	I2C PWR SCL	FUNC_TEST=TRUE
72 47 35	I2C PWR SDA	FUNC_TEST=TRUE
47 35 29 27	I2C UPC SCL	FUNC_TEST=TRUE
47 35 29 27	I2C UPC SDA	FUNC_TEST=TRUE
	GND	FUNC_TEST=TRUE

7 TPS; 10 TPS

DFU/SOC/FCT DISCHARGE

64	PPDCIN G3H CHGR	FUNC_TEST=TRUE
64	PPVBAT G3H CHGR REG	FUNC_TEST=TRUE

Memory Power

91 91 90 19 88 74 73 90 23	PP1V2 S3	FUNC_TEST=TRUE
73 72	PVDDQ PGOOD	FUNC_TEST=TRUE
89 73 72	PVDDQ EN	FUNC_TEST=TRUE
88 51 23 22 21 20	PP1V8 S3 MEM	FUNC_TEST=TRUE
88 50 9 7 6	PP1V2 S3 CPUDDR	FUNC_TEST=TRUE
88 73 24	PP0V6 S0 DDRVTT	FUNC_TEST=TRUE
	GND	FUNC_TEST=TRUE

4 TPS; 5 TPS

Wireless/BT Power

50 32	PP3V3 G3S WLANBT	FUNC_TEST=TRUE
51 32 31	PP1V8 G3S WLANBT	FUNC_TEST=TRUE
	GND	FUNC_TEST=TRUE

2 TPS

DFU/SOC/FCT DMM/Power Sequence

87 64 49 27	PPDCIN G3H	FUNC_TEST=TRUE
89 86 74 68 63 54 52	PP3V3 G3H	FUNC_TEST=TRUE
87 66 50 9 7	PPVCC S0 CPU	FUNC_TEST=TRUE
87 67 50 10 7	PPVCCGT S0 CPU	FUNC_TEST=TRUE
87 66 52 9 7	PPVCCSA S0 CPU	FUNC_TEST=TRUE
87 73 9 7 4	PPVCCIO S0 CPU	FUNC_TEST=TRUE
	PPVCCEDRAM S0 CPU	FUNC_TEST=TRUE
71 16 9 7	PP1V S0SW	FUNC_TEST=TRUE
74 9 7	PP1V2 S0SW	FUNC_TEST=TRUE
70 69 65 42 18 17 9 7 5	PP1V S3	FUNC_TEST=TRUE
86 73 70 54 16 11 7	PP1V PRIM	FUNC_TEST=TRUE
86 70 54 11 7	PPVPCORE S5	FUNC_TEST=TRUE
71 13 11 7	PP3V G3H RTC	FUNC_TEST=TRUE
72 18	ALL SYS PWRGD	FUNC_TEST=TRUE
72 14	PCH RTC RESET L	FUNC_TEST=TRUE
42 13	PM PCH PWROK	FUNC_TEST=TRUE
	PM PCH SYS PWROK	FUNC_TEST=TRUE
42	PM RSMRST L	FUNC_TEST=TRUE
16 13	PM SLP S3 L	FUNC_TEST=TRUE
89 25 15 13 12	PM SLP S0 L	FUNC_TEST=TRUE
89 72 35 18	PLT RST L	FUNC_TEST=TRUE
31 18 17 15 13	PM THRMTRIP L	FUNC_TEST=TRUE
72 17 5	PCH PWRBTN L	FUNC_TEST=TRUE
72 16 13	CPU PROCHOT R L	FUNC_TEST=TRUE
5	CPU CATERR L	FUNC_TEST=TRUE
72 5	CPU VR READY	FUNC_TEST=TRUE
72 65	PMU PVDDMAIN EN	FUNC_TEST=TRUE
72 68	UPC PMU RESET	FUNC_TEST=TRUE
29 28 72 63	PP3V3 G3H RTC	FUNC_TEST=TRUE
74 72 71 63 61 54 50 29 28 27 89 86 76	CHGR EN MVR	FUNC_TEST=TRUE
64 63	P3V3G3S EN	FUNC_TEST=TRUE
74 72	PP3V3 G3S	FUNC_TEST=TRUE
76 74 62 57 51 50 45	P1V8G3S EN	FUNC_TEST=TRUE
89 74 72	PP1V8 IO SSD0	FUNC_TEST=TRUE
85 82 81 80 79 78 77	PPVCCQ ANI SSD0	FUNC_TEST=TRUE
85 82 81 80 79 78 77 70	PP0V9 SSD0	FUNC_TEST=TRUE
85 82 81 80 79 78 77 70	PP2V5 NAND SSD0	FUNC_TEST=TRUE
85 82 81 80 79 78 77	SSD0 WP L	FUNC_TEST=TRUE
78 82 80 79	SSD0 OCARINA PFN L	FUNC_TEST=TRUE
82 81 80 79 78 77	SSD0 OCARINA RESET L	FUNC_TEST=TRUE
82 81	SSD PMU RESET L	FUNC_TEST=TRUE
81 43 34	PP3V3 AWAKE	FUNC_TEST=TRUE
71 40	PMU COLD RESET L	FUNC_TEST=TRUE
72 60 35	PM SLP S4 L	FUNC_TEST=TRUE
89 13	PM SLP S5 L	FUNC_TEST=TRUE
89 13	TP SMC FIXTURE MODE L	FUNC_TEST=TRUE
35	PP1V8 SLPS2R	FUNC_TEST=TRUE
63 60 47 43 42 40 39 34 25 20 27 89 80 81 74 72 73 70 64	SOC SOCHOT L	FUNC_TEST=TRUE
72 34 89	PP1V2 AWAKE	FUNC_TEST=TRUE
71 40	PP0V82 SLPDDR	FUNC_TEST=TRUE
86 70 43 38	PPVDDCPU AWAKE	FUNC_TEST=TRUE
86 70 43 38	PP1V8 S5	FUNC_TEST=TRUE
89 32 18 17 16 15 14 13 12 11 7 74 73 72 70 69 65 53 47 42	PPBUS G3H	FUNC_TEST=TRUE
87 86 75 72 64 61 49	PP1V8 G3S	FUNC_TEST=TRUE
58 57 55 51 48 47 45 44 43 18 76 68 62 60 59	PMU ACTIVE READY	FUNC_TEST=TRUE
89 72 34 28	PP3V3 S5	FUNC_TEST=TRUE
47 43 42 18 14 13 12 11 7 5 4 71 69 68 74 73 73 72	PVCCIO EN	FUNC_TEST=TRUE
71 12 74 73	CPU C10 GATE L	FUNC_TEST=TRUE
86 70 43 39	PP0V9 SLPDDR	FUNC_TEST=TRUE
71 40 39 34	PP1V1 SLPDDR	FUNC_TEST=TRUE
86 71 70 40 39	PP1V1 SLPS2R	FUNC_TEST=TRUE
89 72 70 62 43 42 40 37 27	PP1V8 AWAKE	FUNC_TEST=TRUE
70	PP1V8 SLPS2R PMUVDDGPIO	FUNC_TEST=TRUE
89 72 71	P1V1 SLPDDR SOCFET EN	FUNC_TEST=TRUE
72 33 32	PMU CLK32K WLANBT	FUNC_TEST=TRUE
72 35	SOC WDOG	FUNC_TEST=TRUE
72 35	PMU CLK32K SOC	FUNC_TEST=TRUE
35 32 81 72	PMU SYS ALIVE	FUNC_TEST=TRUE
72 68	P5VG3S EN	FUNC_TEST=TRUE
71 39	PP0V8 SLPS2R	FUNC_TEST=TRUE
86 70 38	PPVDDCPUSRAM AWAKE	FUNC_TEST=TRUE
72 68	P5VG3S PGOOD	FUNC_TEST=TRUE
42 16 13	PM SYSRST L	FUNC_TEST=TRUE
42 35	SMC SYSRST L	FUNC_TEST=TRUE
68 61 55 54 52 51 50 46 29 28 89 86 75	PP5V G3S	FUNC_TEST=TRUE
77	SSD0 S4E0 ANI0 VREF	FUNC_TEST=TRUE
77	SSD0 S4E0 ANI1 VREF	FUNC_TEST=TRUE
78	SSD0 S4E1 ANI0 VREF	FUNC_TEST=TRUE
78	SSD0 S4E1 ANI1 VREF	FUNC_TEST=TRUE
79	SSD0 S4E2 ANI0 VREF	FUNC_TEST=TRUE
79	SSD0 S4E2 ANI1 VREF	FUNC_TEST=TRUE
80	SSD0 S4E3 ANI0 VREF	FUNC_TEST=TRUE
80	SSD0 S4E3 ANI1 VREF	FUNC_TEST=TRUE
	GND	FUNC_TEST=TRUE

6 TPS; 8 TPS

www.xiaomi-schematics.com

PAGE TITLE: FCT

Apple Inc.

DRAWING NUMBER: 051-04273 SIZE: D

REVISION: 4.0.0

BRANCH: evt-1

PAGE: 124 OF 500

SHEET: 83 OF 98

NOTICE OF PROPRIETARY PROPERTY:
THE INFORMATION CONTAINED HEREIN IS THE PROPRIETARY PROPERTY OF APPLE INC.
THE POSESSOR AGREES TO THE FOLLOWING:
I TO MAINTAIN THIS DOCUMENT IN CONFIDENCE
II NOT TO REPRODUCE OR COPY IT
III NOT TO REVEAL OR PUBLISH IT IN WHOLE OR PART
IV ALL RIGHTS RESERVED

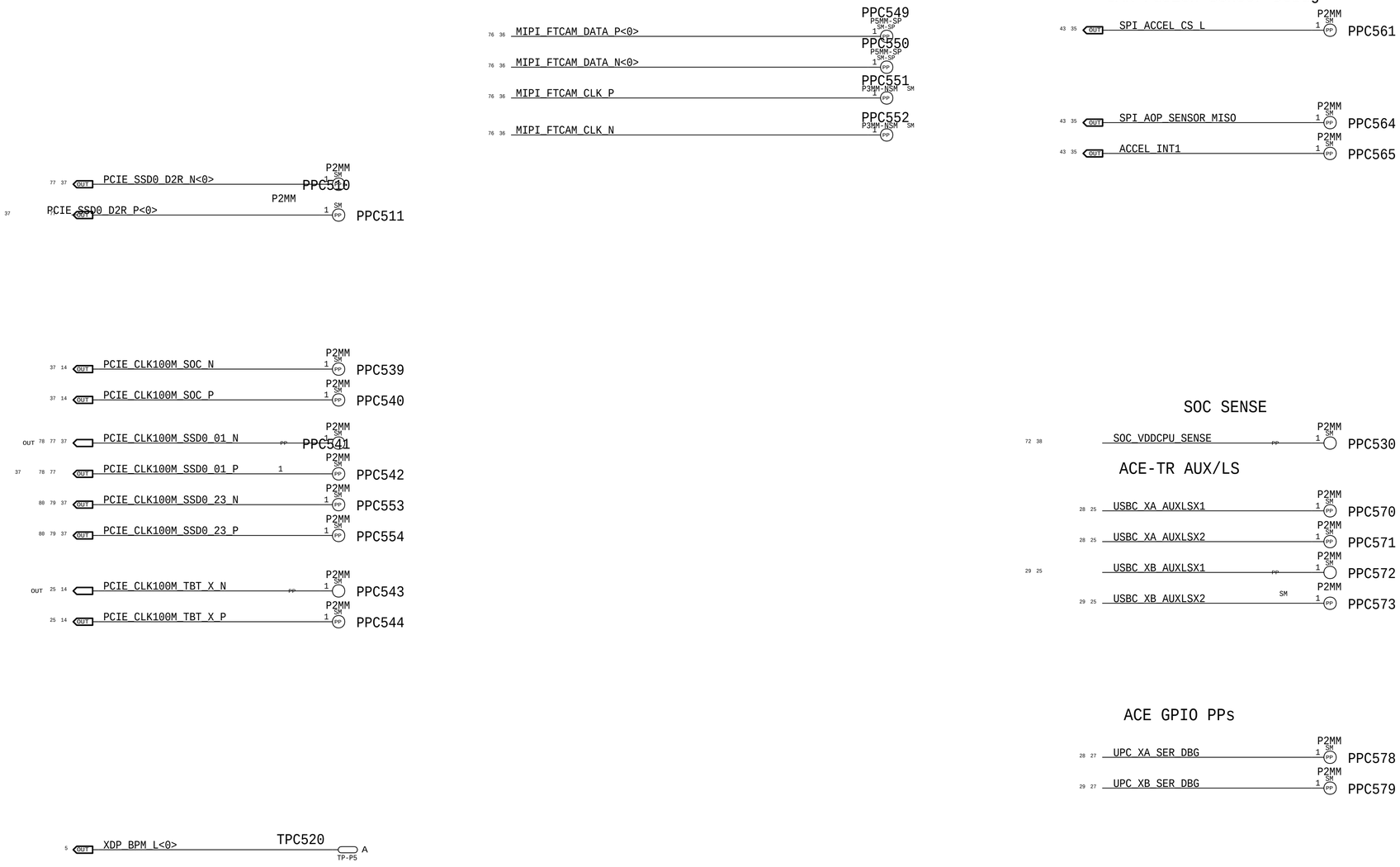

PAGE TITLE

PROBE POINTS

Apple Inc.

DRAWING NUMBER 051-04273 SIZE D

REVISION 4.0.0

BRANCH evt-1

PAGE 125 OF 500

SHEET 84 OF 98

NOTICE OF PROPRIETARY PROPERTY:
THE INFORMATION CONTAINED HEREIN IS THE PROPRIETARY PROPERTY OF APPLE INC.
THE POSESSOR AGREES TO THE FOLLOWING:
I TO MAINTAIN THIS DOCUMENT IN CONFIDENCE
II NOT TO REPRODUCE OR COPY IT
III NOT TO REVEAL OR PUBLISH IT IN WHOLE OR PART
IV ALL RIGHTS RESERVED

KEYBOARD CONNECTOR 5V

PP5V_G3S_KBD

CD500 12PF 5% 25V NP0-C0G 0201

TRACKPAD SPI CLK

SPI_TPAD_3V3_CLK

CD510 12PF 5% 25V NP0-C0G 0201

EOPIO EDRAM VR HIGH SIDE

PPBUS_HS_CPU

CD520 12PF 5% 25V NP0-C0G 0201

CD521 3.0PF +/-0.1PF 25V NP0-C0G 0201

NAND VCC

PP2V5_NAND_SSD0

CD550 12PF 5% 25V NP0-C0G 0201

CD551 3.0PF +/-0.1PF 25V NP0-C0G 0201

CALPE BUCK 9

PP0V9_SSD0

CD532 12PF 5% 25V NP0-C0G 0201

CD533 3.0PF +/-0.1PF 25V NP0-C0G 0201

CALPE BUCK 10

PPVCCQ_ANI_SSD0

CD542 12PF 5% 25V NP0-C0G 0201

CD543 3.0PF +/-0.1PF 25V NP0-C0G 0201

S4E

PPBUS_G3H_SSD0

CD5N0 12PF 5% 25V NP0-C0G 0201

CD5N1 3.0PF +/-0.1PF 25V NP0-C0G 0201

OCARINA VDD

PP0V9_SSD0

CD530 12PF 5% 25V NP0-C0G 0201

CD531 3.0PF +/-0.1PF 25V NP0-C0G 0201

OCARINA VDDIO2

PPVCCQ_ANI_SSD0

CD540 12PF 5% 25V NP0-C0G 0201

CD541 3.0PF +/-0.1PF 25V NP0-C0G 0201

CD545 12PF 5% 25V NP0-C0G 0201

CD546 3.0PF +/-0.1PF 25V NP0-C0G 0201

S4E U8600 VDD

PP0V9_SSD0

CD560 12PF 5% 25V NP0-C0G 0201

CD561 12PF 5% 25V NP0-C0G 0201

CD562 3.0PF +/-0.1PF 25V NP0-C0G 0201

CD563 3.0PF +/-0.1PF 25V NP0-C0G 0201

CD564 12PF 5% 25V NP0-C0G 0201

CD565 3.0PF +/-0.1PF NP0-C0G

S4E U8600 VCC

PP2V5_NAND_SSD0

CD570 12PF 5% 25V NP0-C0G 0201

CD571 12PF 5% 25V NP0-C0G 0201

CD572 3.0PF +/-0.1PF 25V NP0-C0G 0201

CD573 3.0PF +/-0.1PF 25V NP0-C0G 0201

S4E U8600 VDDIO1

PP1V8_IO_SSD0

CD580 12PF 5% 25V NP0-C0G 0201

CD582 3.0PF +/-0.1PF 25V NP0-C0G 0201

S4E U8600 VDDIO2

PPVCCQ_ANI_SSD0

CD590 12PF 5% 25V NP0-C0G 0201

CD591 12PF 5% 25V NP0-C0G 0201

CD592 3.0PF +/-0.1PF 25V NP0-C0G 0201

CD593 3.0PF +/-0.1PF 25V NP0-C0G 0201

S4E U8700 VDD

PP0V9_SSD0

CD5A0 12PF 5% 25V NP0-C0G 0201

CD5A1 12PF 5% 25V NP0-C0G 0201

CD5A2 3.0PF +/-0.1PF 25V NP0-C0G 0201

CD5A3 3.0PF +/-0.1PF 25V NP0-C0G 0201

CD5A4 12PF 5% 25V NP0-C0G 0201

CD5A5 3.0PF +/-0.1PF 25V NP0-C0G 0201

S4E U8700 VCC

PP2V5_NAND_SSD0

CD5B0 12PF 5% 25V NP0-C0G 0201

CD5B1 12PF 5% 25V NP0-C0G 0201

CD5B2 3.0PF +/-0.1PF 25V NP0-C0G 0201

CD5B3 3.0PF +/-0.1PF 25V NP0-C0G 0201

S4E U8700 VDDIO1

PP1V8_IO_SSD0

CD5C0 12PF 5% 25V NP0-C0G 0201

CD5C2 3.0PF +/-0.1PF 25V NP0-C0G 0201

S4E U8700 VDDIO2

PPVCCQ_ANI_SSD0

CD5D0 12PF 5% 25V NP0-C0G 0201

CD5D2 3.0PF +/-0.1PF 25V NP0-C0G 0201

S4E U8800 VDD

PP0V9_SSD0

CD5E0 12PF 5% 25V NP0-C0G 0201

CD5E1 12PF 5% 25V NP0-C0G 0201

CD5E2 3.0PF +/-0.1PF 25V NP0-C0G

CD5E3 3.0PF +/-0.1PF 25V NP0-C0G 0201

CD5E4 12PF 5% 25V NP0-C0G 0201

CD5E5 3.0PF +/-0.1PF 25V NP0-C0G

S4E U8800 VCC

PP2V5_NAND_SSD0

CD5F0 12PF 5% 25V NP0-C0G 0201

CD5F1 12PF 5% 25V NP0-C0G 0201

CD5F2 3.0PF +/-0.1PF 25V NP0-C0G

CD5F3 3.0PF +/-0.1PF 25V NP0-C0G 0201

S4E U8800 VDDIO1

PP1V8_IO_SSD0

CD5G0 12PF 5% 25V NP0-C0G 0201

CD5G2 3.0PF +/-0.1PF 25V NP0-C0G 0201

S4E U8800 VDDIO2

PPVCCQ_ANI_SSD0

CD5H0 12PF 5% 25V NP0-C0G 0201

CD5H2 3.0PF +/-0.1PF 25V NP0-C0G 0201

S4E U8900 VDD

PP0V9_SSD0

CD5J0 12PF 5% 25V NP0-C0G 0201

CD5J1 12PF 5% 25V NP0-C0G 0201

CD5J2 3.0PF +/-0.1PF 25V NP0-C0G 0201

CD5J3 3.0PF +/-0.1PF 25V NP0-C0G 0201

S4E U8900 VCC

PP2V5_NAND_SSD0

CD5K0 12PF 5% 25V NP0-C0G 0201

CD5K1 12PF 5% 25V NP0-C0G 0201

CD5K2 3.0PF +/-0.1PF 25V NP0-C0G 0201

CD5K3 3.0PF +/-0.1PF 25V NP0-C0G 0201

S4E U8900 VDDIO1

PP1V8_IO_SSD0

CD5L0 12PF 5% 25V NP0-C0G 0201

CD5L2 3.0PF +/-0.1PF 25V NP0-C0G 0201

S4E U8900 VDDIO2

PPVCCQ_ANI_SSD0

CD5M0 12PF 5% 25V NP0-C0G 0201

CD5M2 3.0PF +/-0.1PF 25V NP0-C0G 0201

BOM_COST_GROUP=DESENSE

SYNC_MASTER=J213_KELVIN SYNC_DATE=09/13/2018

PAGE TITLE

DESENSE 1

Apple Inc.

DRAWING NUMBER 051-04273 SIZE D

REVISION 4.0.0

BRANCH evt-1

PAGE 135 OF 500

SHEET 85 OF 98

NOTICE OF PROPRIETARY PROPERTY:

THE INFORMATION CONTAINED HEREIN IS THE PROPRIETARY PROPERTY OF APPLE INC.
THE POSESSOR AGREES TO THE FOLLOWING:

I TO MAINTAIN THIS DOCUMENT IN CONFIDENCE
II NOT TO REPRODUCE OR COPY IT
III NOT TO REVEAL OR PUBLISH IT IN WHOLE OR PART
IV ALL RIGHTS RESERVED

www.laptop-schematics.com

CALPE VDD MAIN HIGH SIDE INPUT

71 70 52 PP3V3_G3H_PMU_VDDMAIN

CD670 12PF 5% 25V NP0-C0G 0201
CD671 12PF 5% 25V NP0-C0G 0201
CD672 12PF 5% 25V NP0-C0G 0201
CD673 12PF 5% 25V NP0-C0G 0201
CD674 12PF 5% 25V NP0-C0G 0201
CD675 12PF 5% 25V NP0-C0G 0201
CD676 12PF 5% 25V NP0-C0G 0201
CD677 12PF 5% 25V NP0-C0G 0201
CD678 12PF 5% 25V NP0-C0G 0201
CD679 12PF 5% 25V NP0-C0G 0201

CD6G0 3.0PF +/-0.1PF 25V NP0-C0G 0201
CD6G1 3.0PF +/-0.1PF 25V NP0-C0G 0201
CD6G2 3.0PF +/-0.1PF 25V NP0-C0G 0201
CD6G3 3.0PF +/-0.1PF 25V NP0-C0G 0201
CD6G4 3.0PF +/-0.1PF 25V NP0-C0G 0201
CD6G5 3.0PF +/-0.1PF 25V NP0-C0G 0201
CD6G6 3.0PF +/-0.1PF 25V NP0-C0G 0201
CD6G7 3.0PF +/-0.1PF 25V NP0-C0G 0201
CD6G8 3.0PF +/-0.1PF 25V NP0-C0G 0201
CD6G9 3.0PF +/-0.1PF 25V NP0-C0G 0201

VR 5V G3S

68 61 55 54 52 51 50 46 29 28 89 83 75 PP5V_G3S

CD620 12PF 5% 25V NP0-C0G 0201
CD621 12PF 5% 25V NP0-C0G 0201
CD622 12PF 5% 25V NP0-C0G 0201

CD623 3.0PF +/-0.1PF 25V NP0-C0G 0201
CD624 3.0PF +/-0.1PF 25V NP0-C0G 0201
CD625 3.0PF +/-0.1PF 25V NP0-C0G 0201

VR 3V3 G3H

89 83 74 68 63 54 52 PP3V3_G3H

CD630 12PF 5% 25V NP0-C0G 0201
CD631 12PF 5% 25V NP0-C0G 0201
CD632 12PF 5% 25V NP0-C0G

CD633 3.0PF +/-0.1PF 25V NP0-C0G 0201
CD634 3.0PF +/-0.1PF 25V NP0-C0G 0201
CD635 3.0PF +/-0.1PF 25V NP0-C0G 0201

VR 3V3 G3H HIGH SIDE

68 49 PPVIN_G3H_P3V3G3H

CD640 12PF 5% 25V NP0-C0G 0201
CD641 3.0PF +/-0.1PF 25V NP0-C0G 0201

VR 5V G3S HIGH SIDE

68 49 PPVIN_G3H_P5VG3S

CD650 12PF 5% 25V NP0-C0G 0201
CD651 3.0PF +/-0.1PF 25V NP0-C0G 0201

BATTERY CONNECTOR SYS DETECT

83 63 SYS_DETECT_L

CD660 12PF 5% 25V NP0-C0G 0201
CD661 3.0PF +/-0.1PF 25V NP0-C0G 0201

VR 5V ALS

76 74 73 69 67 66 65 51 PP5V_G3S_CPUREG_MISC

CD6R1 12PF 5% 25V NP0-C0G 0201
CD6R2 3.0PF +/-0.1PF 25V NP0-C0G 0201

CALPE PCH 1V1 PRIM

73 70 54 16 83 7 PP1V_PRIM

CD680 12PF 5% 25V NP0-C0G 0201
CD681 12PF 5% 25V NP0-C0G 0201

CALPE 0V82 SLPDDR

83 70 43 38 PP0V82_SLPDDR

CD690 12PF 5% 25V NP0-C0G 0201
CD691 12PF 5% 25V NP0-C0G 0201

CALPE CPU AWAKE

83 70 43 38 PPVDDCPU_AWAKE

CD6A0 12PF 5% 25V NP0-C0G 0201
CD6A1 3.0PF +/-0.1PF 25V NP0-C0G 0201

CALPE CPU SRAM AWAKE

83 70 38 PPVDDCPUSRAM_AWAKE

CD6B0 12PF 5% 25V NP0-C0G 0201
CD6B1 3.0PF +/-0.1PF 25V NP0-C0G 0201

CALPE 1V8 SLPS2R

43 48 36 26 28 27 89 83 61 74 72 71 70 64 PP1V8_SLPS2R

CD6C0 12PF 5% 25V NP0-C0G 0201
CD6C1 3.0PF +/-0.1PF 25V NP0-C0G 0201

CALPE 1V1 SLPS2R

83 71 70 40 39 PP1V1_SLPS2R

CD6D0 12PF 5% 25V NP0-C0G 0201
CD6D1 3.0PF +/-0.1PF 25V NP0-C0G 0201

CALPE 0V9 SLPDDR

83 70 43 39 PP0V9_SLPDDR

CD6E0 12PF 5% 25V NP0-C0G 0201
CD6E1 3.0PF +/-0.1PF 25V NP0-C0G 0201

CALPE PCH VCORE

83 70 54 11 7 PPVPCORE_S5

CD6F0 12PF 5% 25V NP0-C0G 0201
CD6F1 3.0PF +/-0.1PF 25V NP0-C0G 0201

LCD BACKLIGHT DRIVER VOUT

PPVOUT_S0_LCDBKLT_F

CD600 3PF +/-0.1PF 100V C0G 0201
CD601 3PF +/-0.1PF 100V C0G 0201

83 76 75 PPVOUT_S0_LCDBKLT

CD6J0 3PF +/-0.1PF 100V C0G 0201
CD6J1 3PF +/-0.1PF 100V C0G 0201

EDRAM

PPVCCEDRAM_S0_CPU

CD6L0 12PF 5% 25V NP0-C0G 0201
CD6L1 3.0PF +/-0.1PF 25V NP0-C0G 0201
CD6L2 12PF 5% 25V NP0-C0G 0201
CD6L3 3.0PF +/-0.1PF 25V NP0-C0G 0201

89 83 76 74 72 71 63 61 54 50 29 28 27 PP3V3_G3H_RTC

CD6M0 12PF 5% 25V NP0-C0G 0201
CD6M1 3.0PF +/-0.1PF 25V NP0-C0G 0201

63 PPVIN_G3H_P3V3G3HRTC_R

CD6N0 12PF 5% 25V NP0-C0G 0201
CD6N1 3.0PF +/-0.1PF 25V NP0-C0G 0201

62 61 45 72 PPBUS_G3H

CD6P0 12PF 5% 25V NP0-C0G 0201
CD6P1 3.0PF +/-0.1PF 25V NP0-C0G 0201

BOM_COST_GROUP=DESENSE

SYNC_MASTER=J213_KELVIN SYNC_DATE=09/13/2018

PAGE TITLE
DESENSE 2

Apple Inc.

DRAWING NUMBER 051-04273 SIZE D
REVISION 4.0.0
BRANCH evt-1
PAGE 136 OF 500
SHEET 86 OF 98

NOTICE OF PROPRIETARY PROPERTY:
THE INFORMATION CONTAINED HEREIN IS THE PROPRIETARY PROPERTY OF APPLE INC.
THE POSESSOR AGREES TO THE FOLLOWING:
I TO MAINTAIN THIS DOCUMENT IN CONFIDENCE
II NOT TO REPRODUCE OR COPY IT
III NOT TO REVEAL OR PUBLISH IT IN WHOLE OR PART
IV ALL RIGHTS RESERVED

3V3 G3H RTC VR HIGH SIDE

63 49 PPVIN_G3H_P3V3G3HRTC
- CD700 12PF 5% 25V NP0-C0G 0201
- CD701 3.0PF +/-0.1PF 25V NP0-C0G 0201

3V3 G3H RTC VR

63 PP3V3_G3H_RTC_REG_R
- CD710 12PF 5% 25V NP0-C0G 0201
- CD711 3.0PF +/-0.1PF 25V NP0-C0G 0201

DCIN CHARGER

83 64 49 27 PPDCIN_G3H
- CD720 12PF 5% 25V NP0-C0G 0201
- CD721 3.0PF +/-0.1PF 25V NP0-C0G 0201

DCIN XA ACE2

28 27 PPDCIN_XA_G3H_F
- CD730 12PF 5% 25V NP0-C0G 0201
- CD731 3.0PF +/-0.1PF 25V NP0-C0G 0201

DCIN XB ACE2

29 27 PPDCIN_XB_G3H_F
- CD740 12PF 5% 25V NP0-C0G 0201
- CD741 3.0PF +/-0.1PF 25V NP0-C0G 0201

PBUS CHARGER

87 86 83 75 72 64 PPBUS_G3H
- CD750 12PF 5% 25V NP0-C0G 0201
- CD751 3.0PF +/-0.1PF 25V NP0-C0G 0201

PBUS CPU HIGH SIDE SENSOR

87 86 83 75 72 64 PPBUS_G3H
- CD760 12PF 5% 25V NP0-C0G 0201
- CD761 3.0PF +/-0.1PF 25V NP0-C0G 0201

PBUS RIGHT AMP SENSOR

87 86 83 75 PPBUS_G3H
- CD770 12PF 5% 25V NP0-C0G 0201
- CD771 3.0PF +/-0.1PF 25V NP0-C0G 0201

PBUS LEFT AMP SENSOR

87 86 83 72 64 PPBUS_G3H
- CD7K0 12PF 5% 25V NP0-C0G 0201
- CD7K1 3.0PF +/-0.1PF 25V NP0-C0G 0201

PBUS TRACKPAD

87 86 83 75 72 64 61 49 PPBUS_G3H
- CD7M0 12PF 5% 25V NP0-C0G 0201
- CD7M1 3.0PF +/-0.1PF 25V NP0-C0G 0201

5V G3S TRACKPAD

61 54 PP5V_G3S_TPAD
- CD7L0 12PF 5% 25V NP0-C0G 0201
- CD7L1 3.0PF +/-0.1PF 25V NP0-C0G 0201

CPU CORE VR LOAD SIDE

83 66 50 9 7 PPVCC_S0_CPU
- CD7B0 12PF 5% 25V NP0-C0G 0201
- CD7B1 12PF 5% 25V NP0-C0G 0201
- CD7B2 12PF 5% 25V NP0-C0G 0201
- CD7B3 12PF 5% 25V NP0-C0G 0201
- CD7B4 12PF 5% 25V NP0-C0G 0201
- CD7B5 12PF 5% 25V NP0-C0G 0201
- CD7B6 12PF 5% 25V NP0-C0G 0201
- CD7J0 3.0PF +/-0.1PF 25V NP0-C0G 0201
- CD7J1 3.0PF +/-0.1PF 25V NP0-C0G 0201
- CD7J2 3.0PF +/-0.1PF 25V NP0-C0G 0201
- CD7J3 3.0PF +/-0.1PF 25V NP0-C0G 0201
- CD7J4 3.0PF +/-0.1PF 25V NP0-C0G 0201
- CD7J5 3.0PF +/-0.1PF 25V NP0-C0G 0201
- CD7J6 3.0PF +/-0.1PF 25V NP0-C0G 0201

CPU VCCSA LOAD SIDE

83 66 52 9 7 PPVCCSA_S0_CPU
- CD7C0 12PF 5% 25V NP0-C0G 0201
- CD7C2 12PF 5% 25V NP0-C0G
- CD7C3 12PF 5% 25V NP0-C0G 0201
- CD7C1 3.0PF +/-0.1PF 25V NP0-C0G 0201
- CD7C4 3.0PF +/-0.1PF 25V NP0-C0G 0201
- CD7C5 3.0PF +/-0.1PF 25V NP0-C0G

CPU VCCGT LOAD SIDE

83 67 50 10 7 PPVCCGT_S0_CPU
- CD7D0 12PF 5% 25V NP0-C0G 0201
- CD7D1 12PF 5% 25V NP0-C0G 0201
- CD7D2 12PF 5% 25V NP0-C0G 0201
- CD7D3 12PF 5% 25V NP0-C0G 0201
- CD7D4 12PF 5% 25V NP0-C0G 0201
- CD7D5 12PF 5% 25V NP0-C0G 0201
- CD7D8 12PF 5% 25V NP0-C0G 0201
- CD7V0 3.0PF +/-0.1PF 25V NP0-C0G 0201
- CD7V1 3.0PF +/-0.1PF 25V NP0-C0G
- CD7V2 3.0PF +/-0.1PF 25V NP0-C0G 0201
- CD7V3 3.0PF +/-0.1PF 25V NP0-C0G 0201
- CD7V4 3.0PF +/-0.1PF 25V NP0-C0G 0201
- CD7V5 3.0PF +/-0.1PF 25V NP0-C0G
- CD7V8 3.0PF +/-0.1PF 25V NP0-C0G 0201

CPU VCCIO LOAD SIDE

83 73 9 7 4 PPVCCIO_S0_CPU
- CD780 12PF 5% 25V NP0-C0G 0201
- CD781 3.0PF +/-0.1PF 25V NP0-C0G 0201

VBUS XB

83 30 29 PP20V_USBC_XB_VBUS
- CD7E0 12PF 5% 25V NP0-C0G 0201
- CD7E1 12PF 5% 25V NP0-C0G
- CD7E2 12PF 5% 25V NP0-C0G 0201
- CD7E3 12PF 5% 25V NP0-C0G 0201
- CD7E4 3.0PF +/-0.1PF 25V NP0-C0G 0201
- CD7E5 3.0PF +/-0.1PF 25V NP0-C0G

VBUS XA

83 30 28 27 PP20V_USBC_XA_VBUS
- CD7F0 12PF 5% 25V NP0-C0G 0201
- CD7F4 3.0PF +/-0.1PF 25V NP0-C0G 0201

DFR 1V8 VR

83 48 46 PP1V8_DFR
- CD790 3.0PF +/-0.1PF 25V NP0-C0G 0201
- CD791 3.0PF +/-0.1PF 25V NP0-C0G 0201

CPU CORE/VCCSA/GT VR HIGH SIDE

85 73 69 67 66 65 49 43 PPBUS_HS_CPU
- CD7A0 12PF 5% 25V NP0-C0G 0201
- CD7A1 12PF 5% 25V NP0-C0G 0201
- CD7A2 12PF 5% 25V NP0-C0G 0201
- CD7A3 12PF 5% 25V NP0-C0G 0201
- CD7A4 12PF 5% 25V NP0-C0G 0201
- CD7A5 12PF 5% 25V NP0-C0G 0201
- CD7A6 12PF 5% 25V NP0-C0G 0201
- CD7A7 12PF 5% 25V NP0-C0G 0201
- CD7A8 12PF 5% 25V NP0-C0G 0201
- CD7A9 12PF 5% 25V NP0-C0G 0201
- CD7G1 12PF 5% 25V NP0-C0G 0201
- CD7G2 12PF 5% 25V NP0-C0G 0201
- CD7G3 12PF 5% 25V NP0-C0G 0201
- CD7G4 12PF 5% 25V NP0-C0G 0201
- CD7G5 12PF 5% 25V NP0-C0G 0201
- CD7H0 3.0PF +/-0.1PF 25V NP0-C0G 0201
- CD7H1 3.0PF +/-0.1PF 25V NP0-C0G 0201
- CD7H2 3.0PF +/-0.1PF 25V NP0-C0G 0201
- CD7H3 3.0PF +/-0.1PF 25V NP0-C0G 0201
- CD7H4 3.0PF +/-0.1PF 25V NP0-C0G 0201
- CD7H5 3.0PF +/-0.1PF 25V NP0-C0G 0201
- CD7H6 3.0PF +/-0.1PF 25V NP0-C0G 0201
- CD7H7 3.0PF +/-0.1PF 25V NP0-C0G 0201
- CD7H8 3.0PF +/-0.1PF 25V NP0-C0G 0201
- CD7H9 3.0PF +/-0.1PF 25V NP0-C0G 0201
- CD7I1 3.0PF +/-0.1PF 25V NP0-C0G 0201
- CD7I2 3.0PF +/-0.1PF 25V NP0-C0G 0201
- CD7I3 3.0PF +/-0.1PF 25V NP0-C0G 0201
- CD7I4 3.0PF +/-0.1PF 25V NP0-C0G 0201
- CD7I5 3.0PF +/-0.1PF 25V NP0-C0G 0201

BOM_COST_GROUP=DESENSE

SYNC_MASTER=J213_KELVIN SYNC_DATE=09/12/2018

PAGE TITLE: DESENSE 3

Apple Inc.

DRAWING NUMBER: 051-04273 SIZE: D

REVISION: 4.0.0

BRANCH: evt-1

PAGE: 137 OF 500

SHEET: 87 OF 98

NOTICE OF PROPRIETARY PROPERTY:
THE INFORMATION CONTAINED HEREIN IS THE PROPRIETARY PROPERTY OF APPLE INC.
THE POSESSOR AGREES TO THE FOLLOWING:
I TO MAINTAIN THIS DOCUMENT IN CONFIDENCE
II NOT TO REPRODUCE OR COPY IT
III NOT TO REVEAL OR PUBLISH IT IN WHOLE OR PART
IV ALL RIGHTS RESERVED

www.laptop-schematics.com

MEM 1V2 LOAD SIDE

PP1V2_S3

CD800 12PF 5% 25V NP0-C0G 0201
CD801 12PF 5% 25V NP0-C0G 0201
CD802 12PF 5% 25V NP0-C0G
CD803 12PF 5% 25V NP0-C0G 0201
CD804 12PF 5% 25V NP0-C0G 0201
CD805 12PF 5% 25V NP0-C0G 0201
CD806 12PF 5% 25V NP0-C0G
CD807 12PF 5% 25V NP0-C0G 0201

CD808 12PF 5% 25V NP0-C0G 0201
CD809 12PF 5% 25V NP0-C0G 0201
CD810 12PF 5% 25V NP0-C0G 0201
CD811 12PF 5% 25V NP0-C0G 0201
CD812 12PF 5% 25V NP0-C0G 0201
CD813 12PF 5% 25V NP0-C0G 0201
CD814 12PF 5% 25V NP0-C0G 0201
CD815 12PF 5% 25V NP0-C0G 0201

CD816 12PF 5% 25V NP0-C0G 0201
CD817 12PF 5% 25V NP0-C0G 0201
CD818 12PF 5% 25V NP0-C0G 0201
CD819 12PF 5% 25V NP0-C0G 0201
CD820 12PF 5% 25V NP0-C0G 0201
CD821 12PF 5% 25V NP0-C0G 0201
CD822 12PF 5% 25V NP0-C0G 0201
CD823 12PF 5% 25V NP0-C0G 0201

CD824 12PF 5% 25V NP0-C0G 0201
CD825 12PF 5% 25V NP0-C0G 0201
CD827 12PF 5% 25V NP0-C0G 0201
CD828 12PF 5% 25V NP0-C0G 0201

CD832 3.0PF +/-0.1PF 25V NP0-C0G 0201
CD833 3.0PF +/-0.1PF 25V NP0-C0G 0201
CD834 3.0PF +/-0.1PF 25V NP0-C0G
CD835 3.0PF +/-0.1PF 25V NP0-C0G 0201
CD836 3.0PF +/-0.1PF 25V NP0-C0G 0201
CD837 3.0PF +/-0.1PF 25V NP0-C0G 0201
CD838 3.0PF +/-0.1PF 25V NP0-C0G
CD839 3.0PF +/-0.1PF 25V NP0-C0G 0201

CD840 3.0PF +/-0.1PF 25V NP0-C0G 0201
CD841 3.0PF +/-0.1PF 25V NP0-C0G 0201
CD842 3.0PF +/-0.1PF 25V NP0-C0G 0201
CD843 3.0PF +/-0.1PF 25V NP0-C0G 0201
CD844 3.0PF +/-0.1PF 25V NP0-C0G 0201
CD845 3.0PF +/-0.1PF 25V NP0-C0G 0201
CD846 3.0PF +/-0.1PF 25V NP0-C0G 0201
CD847 3.0PF +/-0.1PF 25V NP0-C0G 0201

CD848 3.0PF +/-0.1PF 25V NP0-C0G 0201
CD849 3.0PF +/-0.1PF 25V NP0-C0G 0201
CD850 3.0PF +/-0.1PF 25V NP0-C0G 0201
CD851 3.0PF +/-0.1PF 25V NP0-C0G 0201
CD852 3.0PF +/-0.1PF 25V NP0-C0G 0201
CD853 3.0PF +/-0.1PF 25V NP0-C0G 0201
CD854 3.0PF +/-0.1PF 25V NP0-C0G 0201
CD855 3.0PF +/-0.1PF 25V NP0-C0G 0201

CD856 3.0PF +/-0.1PF 25V NP0-C0G 0201
CD857 3.0PF +/-0.1PF 25V NP0-C0G 0201
CD859 3.0PF +/-0.1PF 25V NP0-C0G 0201
CD860 3.0PF +/-0.1PF 25V NP0-C0G 0201
CD861 3.0PF +/-0.1PF 25V NP0-C0G 0201
CD862 3.0PF +/-0.1PF 25V NP0-C0G 0201
CD863 3.0PF +/-0.1PF 25V NP0-C0G 0201

CD864 3.0PF +/-0.1PF 25V NP0-C0G 0201
CD865 3.0PF +/-0.1PF 25V NP0-C0G 0201
CD866 3.0PF +/-0.1PF 25V NP0-C0G
CD867 3.0PF +/-0.1PF 25V NP0-C0G 0201

MEM 1V8 LOAD SIDE

PP1V8_S3_MEM

CD870 12PF 5% 25V NP0-C0G 0201
CD871 12PF 5% 25V NP0-C0G 0201
CD872 12PF 5% 25V NP0-C0G 0201
CD873 12PF 5% 25V NP0-C0G 0201
CD874 12PF 5% 25V NP0-C0G 0201
CD875 12PF 5% 25V NP0-C0G 0201
CD876 12PF 5% 25V NP0-C0G 0201
CD877 12PF 5% 25V NP0-C0G 0201

CD880 3.0PF +/-0.1PF 25V NP0-C0G 0201
CD881 3.0PF +/-0.1PF 25V NP0-C0G 0201
CD882 3.0PF +/-0.1PF 25V NP0-C0G 0201
CD883 3.0PF +/-0.1PF 25V NP0-C0G 0201
CD884 3.0PF +/-0.1PF 25V NP0-C0G 0201
CD885 3.0PF +/-0.1PF 25V NP0-C0G 0201
CD886 3.0PF +/-0.1PF 25V NP0-C0G 0201
CD887 3.0PF +/-0.1PF 25V NP0-C0G 0201

MEM 0V6 DDRVTT LOAD SIDE

PP0V6_S0_DDRVTT

CD890 12PF 5% 25V NP0-C0G 0201
CD891 12PF 5% 25V NP0-C0G 0201
CD892 12PF 5% 25V NP0-C0G
CD893 12PF 5% 25V NP0-C0G 0201
CD894 12PF 5% 25V NP0-C0G 0201
CD895 12PF 5% 25V NP0-C0G 0201
CD896 12PF 5% 25V NP0-C0G
CD897 12PF 5% 25V NP0-C0G 0201

CD8A0 3.0PF +/-0.1PF 25V NP0-C0G 0201
CD8A1 3.0PF +/-0.1PF 25V NP0-C0G 0201
CD8A2 3.0PF +/-0.1PF 25V NP0-C0G 0201
CD8A3 3.0PF +/-0.1PF 25V NP0-C0G 0201
CD8A4 3.0PF +/-0.1PF 25V NP0-C0G 0201
CD8A5 3.0PF +/-0.1PF 25V NP0-C0G 0201
CD8A6 3.0PF +/-0.1PF 25V NP0-C0G 0201
CD8A7 3.0PF +/-0.1PF 25V NP0-C0G 0201

www.laptop-schematics.com

CPU 1V2 LOAD SIDE

PP1V2_S3_CPUDDR

CD8B0 12PF 5% 25V NP0-C0G 0201
CD8B1 12PF 5% 25V NP0-C0G 0201
CD8B2 12PF 5% 25V NP0-C0G 0201
CD8B3 12PF 5% 25V NP0-C0G 0201

CD8C0 3.0PF +/-0.1PF 25V NP0-C0G 0201
CD8C1 3.0PF +/-0.1PF 25V NP0-C0G 0201
CD8C2 3.0PF +/-0.1PF 25V NP0-C0G 0201
CD8C3 3.0PF +/-0.1PF 25V NP0-C0G 0201

TBT X SVR

PP0V9_TBT_X_SVR

CD8H0 12PF 5% 25V NP0-C0G 0201
CD8H1 3.0PF +/-0.1PF 25V NP0-C0G 0201

TBT X S0

PP3V3_TBT_X_S0

CD8D0 12PF 5% 25V NP0-C0G 0201
CD8D1 12PF 5% 25V NP0-C0G 0201
CD8D2 3.0PF +/-0.1PF 25V NP0-C0G 0201
CD8D3 3.0PF +/-0.1PF 25V NP0-C0G 0201

EDP CONNECTOR 5V LCD

PP5V_S0SW_LCD

CD8E0 12PF 5% 25V NP0-C0G 0201
CD8E1 3.0PF +/-0.1PF 25V NP0-C0G 0201

EDP CONNECTOR 5V ALS

PP5V_G3S_ALSCAM

CD8F0 12PF 5% 25V NP0-C0G 0201
CD8F1 3.0PF +/-0.1PF 25V NP0-C0G 0201

EDP CONNECTOR 3V3 LCD

PP3V3_S0SW_LCD

CD8G0 12PF 5% 25V NP0-C0G 0201
CD8G1 3.0PF +/-0.1PF 25V NP0-C0G 0201

BOM_COST_GROUP=DESENSE

SYNC_MASTER=J213_KELVIN SYNC_DATE=09/12/2018

PAGE TITLE: DESENSE 4

Apple Inc.

DRAWING NUMBER: 051-04273 SIZE: D

REVISION: 4.0.0

BRANCH: evt-1

PAGE: 138 OF 500

SHEET: 88 OF 98

NOTICE OF PROPRIETARY PROPERTY:
THE INFORMATION CONTAINED HEREIN IS THE PROPRIETARY PROPERTY OF APPLE INC.
THE POSESSOR AGREES TO THE FOLLOWING:
I TO MAINTAIN THIS DOCUMENT IN CONFIDENCE
II NOT TO REPRODUCE OR COPY IT
III NOT TO REVEAL OR PUBLISH IT IN WHOLE OR PART
IV ALL RIGHTS RESERVED

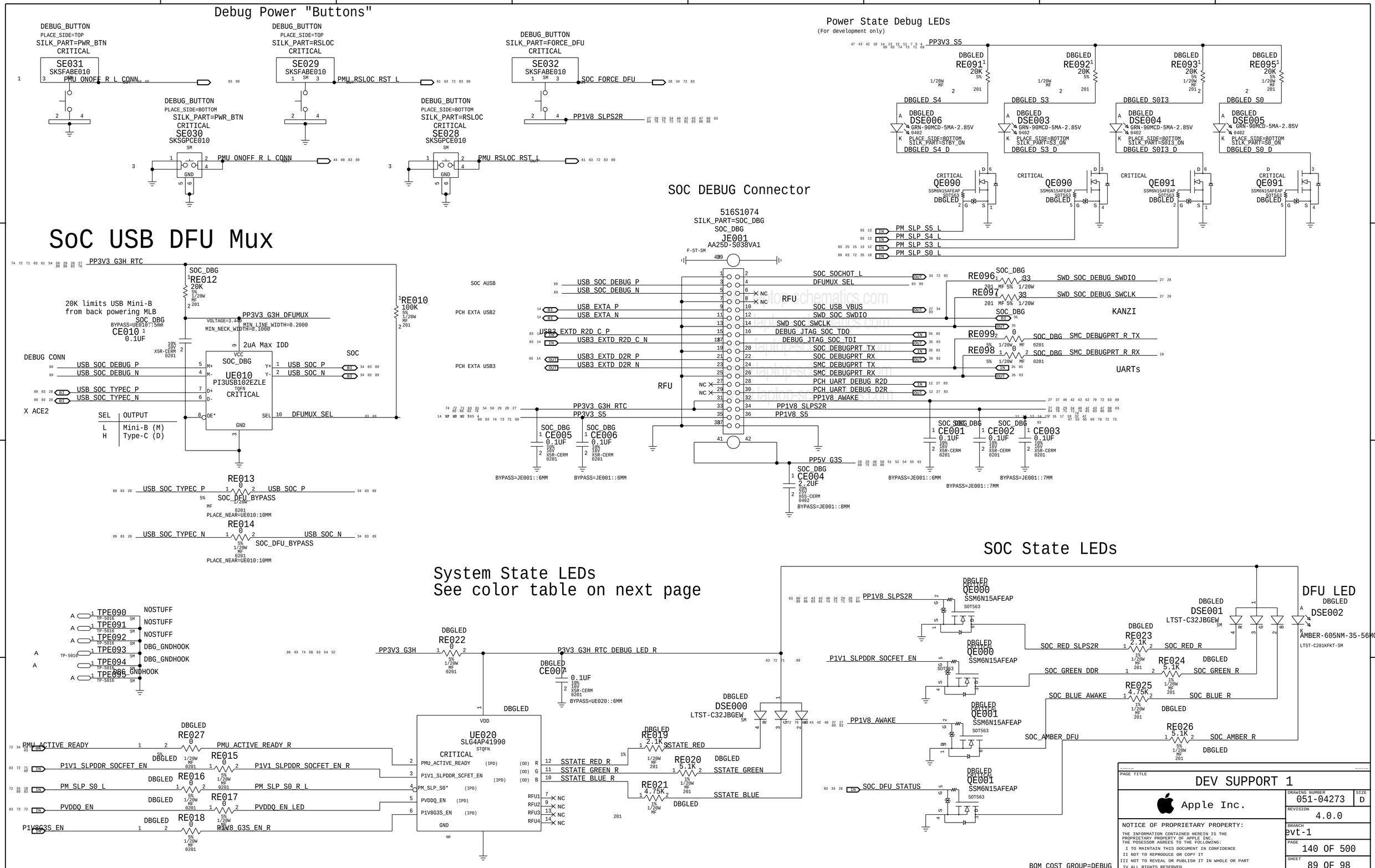
Debug Power "Buttons"
DEBUG_BUTTON
PLACE_SIDE=TOP
SILK_PART=PWR_BTN
CRITICAL
SE031
SKSFABE010
PMU_ONOFF_R_L_CONN
DEBUG_BUTTON
PLACE_SIDE=TOP
SILK_PART=RSLOC
CRITICAL
SE029
SKSFABE010
PMU_RSLOC_RST_L
DEBUG_BUTTON
SILK_PART=FORCE_DFU
CRITICAL
SE032
SKSFABE010
SOC_FORCE_DFU
DEBUG_BUTTON
PLACE_SIDE=BOTTOM
SILK_PART=PWR_BTN
CRITICAL
SE030
SKSGPCE010
PMU_ONOFF_R_L_CONN
DEBUG_BUTTON
PLACE_SIDE=BOTTOM
SILK_PART=RSLOC
CRITICAL
SE028
SKSGPCE010
PMU_RSLOC_RST_L
PP1V8_SLPS2R
Power State Debug LEDs
(For development only)
PP3V3_S5
DBGLED RE091 20K
DBGLED RE092 20K
DBGLED RE093 20K
DBGLED RE095 20K
DBGLED_S4
DBGLED_S3
DBGLED_S0I3
DBGLED_S0
DBGLED DSE006 GRN-90MCD-5MA-2.85V
DBGLED DSE003 GRN-90MCD-5MA-2.85V
DBGLED DSE004 GRN-90MCD-5MA-2.85V
DBGLED DSE005 GRN-90MCD-5MA-2.85V
PLACE_SIDE=BOTTOM
SILK_PART=STBY_ON
SILK_PART=S3_ON
SILK_PART=S0I3_ON
SILK_PART=S0_ON
DBGLED_S4_D
DBGLED_S3_D
DBGLED_S0I3_D
DBGLED_S0_D
CRITICAL QE090 SSM6N15AFEAP SOT563
CRITICAL QE091 SSM6N15AFEAP SOT563
PM_SLP_S5_L
PM_SLP_S4_L
PM_SLP_S3_L
PM_SLP_S0_L
SoC USB DFU Mux
PP3V3_G3H_RTC
SOC_DBG RE012 20K
20K limits USB Mini-B
from back powering MLB
SOC_DBG CE010 0.1UF
BYPASS=UE010::5mm
PP3V3_G3H_DFUMUX
VOLTAGE=3.4V
MIN_LINE_WIDTH=0.2000
MIN_NECK_WIDTH=0.1000
2uA Max IDD
RE010 100K
DEBUG CONN
USB_SOC_DEBUG_P
USB_SOC_DEBUG_N
USB_SOC_TYPEC_P
USB_SOC_TYPEC_N
X ACE2
SOC_DBG
UE010
PI3USB102EZLE
TQFN
CRITICAL
SOC
USB_SOC_P
USB_SOC_N
DFUMUX_SEL
SEL | OUTPUT
L | Mini-B (M)
H | Type-C (D)
RE013 0 SOC_DFU_BYPASS
PLACE_NEAR=UE010:10MM
RE014 0 SOC_DFU_BYPASS
PLACE_NEAR=UE010:10MM
SOC DEBUG Connector
516S1074
SILK_PART=SOC_DBG
SOC_DBG
JE001
AA25D-S038VA1
F-ST-SM
SOC AUSB
PCH EXTA USB2
PCH EXTA USB3
USB_SOC_DEBUG_P
USB_SOC_DEBUG_N
USB_EXTA_P
USB_EXTA_N
USB3_EXTD_R2D_C_P
USB3_EXTD_R2D_C_N
USB3_EXTD_D2R_P
USB3_EXTD_D2R_N
SOC_SOCHOT_L
DFUMUX_SEL
SOC_USB_VBUS
SWD_SOC_SWDIO
SWD_SOC_SWCLK
DEBUG_JTAG_SOC_TDO
DEBUG_JTAG_SOC_TDI
SOC_DEBUGPRT_TX
SOC_DEBUGPRT_RX
SMC_DEBUGPRT_TX
SMC_DEBUGPRT_RX
PCH_UART_DEBUG_R2D
PCH_UART_DEBUG_D2R
PP1V8_AWAKE
PP1V8_SLPS2R
PP1V8_S5
PP3V3_G3H_RTC
PP3V3_S5
RFU
RE096 33 SWD_SOC_DEBUG_SWDIO
RE097 33 SWD_SOC_DEBUG_SWCLK
KANZI
RE099 0 SMC_DEBUGPRT_R_TX
RE098 0 SMC_DEBUGPRT_R_RX
UARTs
SOC_DBG CE005 0.1UF
SOC_DBG CE006 0.1UF
SOC_DBG CE001 0.1UF
SOC_DBG CE002 0.1UF
SOC_DBG CE003 0.1UF
BYPASS=JE001::6MM
BYPASS=JE001::7MM
PP5V_G3S
SOC_DBG CE004 2.2UF
BYPASS=JE001::8MM
System State LEDs
See color table on next page
TPE090 NOSTUFF
TPE091 NOSTUFF
TPE092 NOSTUFF
TPE093 DBG_GNDHOOK
TPE094 DBG_GNDHOOK
TPE095 DBG_GNDHOOK
PP3V3_G3H
DBGLED RE022 0
P3V3_G3H_RTC_DEBUG_LED_R
DBGLED CE007 0.1UF
BYPASS=UE020::6MM
UE020
SLG4AP41990
STQFN
CRITICAL
PMU_ACTIVE_READY
P1V1_SLPDDR_SCFET_EN
PM_SLP_S0*
PVDDQ_EN
P1V8G3S_EN
SSTATE_RED_R
SSTATE_GREEN_R
SSTATE_BLUE_R
RFU1
RFU2
RFU3
RFU4
DBGLED RE027 0 PMU_ACTIVE_READY_R
DBGLED RE015 0 P1V1_SLPDDR_SCFET_EN_R
DBGLED RE016 0 PM_SLP_S0_R_L
DBGLED RE017 0 PVDDQ_EN_LED
DBGLED RE018 0 P1V8_G3S_EN_R
DBGLED RE019 2.1K SSTATE_RED
DBGLED RE020 5.1K SSTATE_GREEN
DBGLED RE021 4.75K SSTATE_BLUE
DBGLED DSE000 LTST-C32JBGEW
SOC State LEDs
DBGLED QE000 SSM6N15AFEAP
DBGLED QE001 SSM6N15AFEAP
SOC_DFU_STATUS
SOC_RED_SLPS2R
SOC_GREEN_DDR
SOC_BLUE_AWAKE
SOC_AMBER_DFU
DBGLED RE023 2.1K SOC_RED_R
DBGLED RE024 5.1K SOC_GREEN_R
DBGLED RE025 4.75K SOC_BLUE_R
DBGLED RE026 5.1K SOC_AMBER_R
DBGLED DSE001 LTST-C32JBGEW
DFU LED
DBGLED DSE002 AMBER-605NM-35-56MCD
LTST-C281KFKT-SM
BOM_COST_GROUP=DEBUG
PAGE TITLE
DEV SUPPORT 1
Apple Inc.
DRAWING NUMBER 051-04273
SIZE D
REVISION 4.0.0
BRANCH evt-1
PAGE 140 OF 500
SHEET 89 OF 98
NOTICE OF PROPRIETARY PROPERTY:
THE INFORMATION CONTAINED HEREIN IS THE PROPRIETARY PROPERTY OF APPLE INC.
THE POSESSOR AGREES TO THE FOLLOWING:
I TO MAINTAIN THIS DOCUMENT IN CONFIDENCE
II NOT TO REPRODUCE OR COPY IT
III NOT TO REVEAL OR PUBLISH IT IN WHOLE OR PART
IV ALL RIGHTS RESERVED

UE020 SAK Truth Table:

INPUTS					OUTPUTS (OD)		
PMU_ACT_RDY	SLP_SCFET_EN	SLP_SC_L	VDDQ_EN	1V8G3S_EN	R	G	COLOR
0	0	0	0	0	BLINK	1	Blinking Red
0	0	0	0	1	0	1	Red
0	0	0	1	0	0	1	Magenta
0	0	0	1	1	0	0	White
0	0	1	0	0	0	1	Magenta
0	0	1	0	1	0	1	Magenta
0	0	1	1	0	0	1	Magenta
0	0	1	1	1	0	1	Magenta
0	1	0	0	0	0	1	Magenta
0	1	0	0	1	0	1	Magenta
0	1	0	1	0	0	1	Magenta
0	1	0	1	1	0	1	Magenta
0	1	1	0	0	0	1	Magenta
0	1	1	0	1	0	1	Magenta
0	1	1	1	0	0	1	Magenta
0	1	1	1	1	0	1	Magenta
1	0	0	0	0	0	1	Magenta
1	0	0	0	1	0	1	Magenta
1	0	0	1	0	0	1	Magenta
1	0	0	1	1	0	1	Magenta
1	0	1	0	0	0	1	Magenta
1	0	1	0	1	0	1	Magenta
1	0	1	1	0	0	1	Magenta
1	0	1	1	1	0	1	Magenta
1	1	0	0	0	0	1	Magenta
1	1	0	0	1	0	1	Magenta
1	1	0	1	0	0	1	Magenta
1	1	0	1	1	0	1	Magenta
1	1	1	0	0	BLINK	0	Blinking Green & Yellow
1	1	1	0	1	0	0	Yellow
1	1	1	1	0	0	1	Magenta
1	1	1	1	1	1	1	Blue
1	1	1	1	0	0	1	Magenta
1	1	1	0	1	0	1	Magenta
1	1	1	0	0	0	1	Magenta
1	1	1	1	1	1	0	Green

www.laptop-schematics.com

BOM_COST_GROUP=DEBUG

SYNC_MASTER=J313_MOET SYNC_DATE=06/22/2018

PAGE TITLE

DEV SUPPORT 2

Apple Inc.

DRAWING NUMBER 051-04273

SIZE D

REVISION 4.0.0

BRANCH evt-1

PAGE 141 OF 500

SHEET 90 OF 98

NOTICE OF PROPRIETARY PROPERTY:
THE INFORMATION CONTAINED HEREIN IS THE PROPRIETARY PROPERTY OF APPLE INC.
THE POSESSOR AGREES TO THE FOLLOWING:
I TO MAINTAIN THIS DOCUMENT IN CONFIDENCE
II NOT TO REPRODUCE OR COPY IT
III NOT TO REVEAL OR PUBLISH IT IN WHOLE OR PART
IV ALL RIGHTS RESERVED

CPU

PART NUMBER	QTY	DESCRIPTION	REFERENCE DES	CRITICAL	BOM OPTION
337S00574	1	CPU,CFLU,SRCUU,QS,D0,2.3,28W,1.05,BGA1528	U0500	CRITICAL	CPU:28W_2P3G_SRCUU
337S00572	1	CPU,CFLU,SRCK5,QS,D0,2.7,28W,1.2,BGA1528	U0500	CRITICAL	CPU:28W_2P7G_SRCK5
337S00693	1	CPU,CFLU,QRH7,QS,D0,1.4,1.05,BGA1528	U0500	CRITICAL	CPU:15W_1P4G_QRH7
337S00692	1	CPU,CFLU,QRH6,QS,D0,1.7,1.15,BGA1528	U0500	CRITICAL	CPU:15W_1P7G_QRH6

SOC

PART NUMBER	QTY	DESCRIPTION	REFERENCE DES	CRITICAL	BOM OPTION
339S00386	1	POP,GIBRALTAR+1GB 28NM,M,DEV,SCK,CSP1122	U3900	CRITICAL	SOC:DEV_1G
339S00388	1	POP,GIBRALTAR+2GB 20NM,M,DEV,SCK,CSP1122	U3900	CRITICAL	SOC:DEV_2G
339S00601	1	POP,GIBRALTAR_L+1GB 16NM,M,B0,SCK,C1122	U3900	CRITICAL	SOC:PROD_B0_1G
339S00605	1	POP,GIBRALTAR_L+2GB 16NM,M,B0,SCK,C1122	U3900	CRITICAL	SOC:PROD_B0_2G

AMR ASSEMBLY

PART NUMBER	QTY	DESCRIPTION	REFERENCE DES	CRITICAL	BOM OPTION
677-10581	1	SUBASSY (T&R) PCBA,AMR INTERPOSER,X941	J4800	CRITICAL	AMR:POC

TBT

PART NUMBER	QTY	DESCRIPTION	REFERENCE DES	CRITICAL	BOM OPTION
338S00441	1	IC,TBT,TITAN RIDGE DP,SLMHS,PRQ,C1,CSP337	U2800	CRITICAL	TBT:TR_C1_PRQ

UPC

PART NUMBER	QTY	DESCRIPTION	REFERENCE DES	CRITICAL	BOM OPTION
353S01478	4	IC,CD3217,ACE2,A0,USB PWR SW W/HV,BGA123	U3100,U3200	CRITICAL	UPC:ACE2_A0
353S01826	4	IC,CD3217,ACE2,B1,USB PWR SW W/HV,BGA123	U3100,U3200	CRITICAL	UPC:ACE2_B1
353S01960	4	IC,CD3217,ACE2,B2,USB PWR SW W/HV,BGA123	U3100,U3200	CRITICAL	UPC:ACE2_B2

WIRELESS

PART NUMBER	QTY	DESCRIPTION	REFERENCE DES	CRITICAL	BOM OPTION
339S00586	1	MODULE,WIFI/BT,SAPPORO,ES2.1,M,LGA451	U3701	CRITICAL	MODULE:MUR__ES_2P1
339S00599	1	MODULE,WIFI/BT,SAPPORO,ES23,M,LGA451	U3701	CRITICAL	MODULE:MUR_ES_2P3
339S00616	1	MODULE,WIFI/BT,SAPPORO,ES3.1,M,LGA451	U3701	CRITICAL	MODULE:MUR_ES_3P1
339S00628	1	MODULE,WIFI/BT,SAPPORO,ES2.3,U,LGA451	U3701	CRITICAL	MODULE:USI_ES_2P3

PMU

PART NUMBER	QTY	DESCRIPTION	REFERENCE DES	CRITICAL	BOM OPTION
338S00466	1	IC,PMU,CALPE-L,D2249A0,OTP-BC,CSP324	U7800	CRITICAL	CALPE_L:OTP_BC

CHARGER IC

PART NUMBER	QTY	DESCRIPTION	REFERENCE DES	CRITICAL	BOM OPTION
353S01525	1	IC,ISL9240HIBOZ,PMU,SUONA,WCSP40,2.1X3.3	U7000	CRITICAL	CHARGER_IC:POC

DRAM

PART NUMBER	QTY	DESCRIPTION	REFERENCE DES	CRITICAL	BOM OPTION
333S00125	4	IC,SDRAM,LPDDR3-2133,16GBIT,21NM,H,BGA178	U2300,U2400,U2500,U2600	CRITICAL	DRAM:08GB_HY
333S00069	4	IC,SDRAM,LPDDR3-2133,16GBIT,20NM,BGA178	U2300,U2400,U2500,U2600	CRITICAL	DRAM:08GB_MI
333S00166	4	IC,SDRAM,LPDDR3-2133,16GBIT,20NM,BGA178	U2300,U2400,U2500,U2600	CRITICAL	DRAM:08GB_SS
333S00126	4	IC,SDRAM,LPDDR3-2133,32GBIT,21NM,H,BGA178	U2300,U2400,U2500,U2600	CRITICAL	DRAM:16GB_HY
333S00070	4	IC,SDRAM,LPDDR3-2133,32GBIT,20NM,BGA178	U2300,U2400,U2500,U2600	CRITICAL	DRAM:16GB_MI
333S00167	4	IC,SDRAM,LPDDR3-2133,32GBIT,20NM,BGA178	U2300,U2400,U2500,U2600	CRITICAL	DRAM:16GB_SS

SE

PART NUMBER	QTY	DESCRIPTION	REFERENCE DES	CRITICAL	BOM OPTION
998-11132	1	IC,RTM4,ES2.1,PN80V,DEV,UFLGA64	U5000	CRITICAL	SE:ES2P1_DEV
338S00253	1	IC,RTM4,ES2.1,PN80V,PRD,UFLGA64	U5000	CRITICAL	SE:ES2P1_PROD

BMU FLEX

PART NUMBER	QTY	DESCRIPTION	REFERENCE DES	CRITICAL	BOM OPTION
056-02919	1	MCO,FLEX,POWER,X502	BMU_FLEX	CRITICAL	BMU_FLEX:POC

OCARINA

PART NUMBER	QTY	DESCRIPTION	REFERENCE DES	CRITICAL	BOM OPTION
338S00410	1	IC,PMU,OCARINA,D2499A0,OTP-AG,WLCSP56	U9000	CRITICAL	SSD:4L

TBT ROM

PART NUMBER	QTY	DESCRIPTION	REFERENCE DES	CRITICAL	BOM OPTION
341S01197	1	IC,TBT-X (V30.2) PROTO-0,X1536	U2890	CRITICAL	TBT_ROM:P0_ACE2A0
341S01228	1	IC,TBT-X (VXXXX) NEW PROTO-0,X1536	U2890	CRITICAL	TBT_ROM:P0_ACE2B1
341S01233	1	IC,TBT-X (VXXXX) PROTO-1,X1536	U2890	CRITICAL	TBT_ROM:P1
341S01338		IC,TBT-X (VXXXX) PROTO-1,X1536	U2890	CRITICAL	TBT_ROM:EVT

BT ROM

PART NUMBER	QTY	DESCRIPTION	REFERENCE DES	CRITICAL	BOM OPTION
335S00348	1	IC,SPI SERIAL FLASH,4M BIT,1.8V,USON8	U3750	CRITICAL	BT_ROM:BLANK_WINBOND
335S00400	1	IC,SPI SERIAL FLASH,4M BIT,1.8V,USON8	U3750	CRITICAL	BT_ROM:BLANK_MACRONIX
341S01184	1	BT SFLASH ROM (V2) PROTO-0,X1536	U3750	CRITICAL	BT_ROM:P0
341S01260		ROM,BT SFLASH (VXX) PROTO-1,X1536	U3750	CRITICAL	BT_ROM:P1

WIFI ROM

PART NUMBER	QTY	DESCRIPTION	REFERENCE DES	CRITICAL	BOM OPTION
335S00214	1	IC,EEPROM,SER,UWIRE,16K,1.8V,DFN8	U3710	CRITICAL	WIFI_ROM:BLANK_ON
335S00216	1	IC,EEPROM,SER,UWIRE,16K,1.8V,DFN8	U3710	CRITICAL	WIFI_ROM:BLANK_ROHM
341S01087		IC,WIFI ROM (V00) WW1,X1421	U3710	CRITICAL	WIFI_ROM:V00

SPEAKER AMP

PART NUMBER	QTY	DESCRIPTION	REFERENCE DES	CRITICAL	BOM OPTION
353S01871	4	IC,TAS5770L,C0,CLASS D AMP,CSP30	U6400,U6450,U6500,U6550	CRITICAL	SPEAKER_AMP:C0

VR DRIVER CPU CORE

PART NUMBER	QTY	DESCRIPTION	REFERENCE DES	CRITICAL	BOM OPTION
353S00519		IC,SIC621,DR MOS,IMVP-8,60A,PQFN31,5X5MM	U7210,U7220	CRITICAL	DR_MOS_CORE:VISHAY

VR DRIVER CPU VCCSA

PART NUMBER	QTY	DESCRIPTION	REFERENCE DES	CRITICAL	BOM OPTION
353S00525	1	IC,SIC532,DR MOS,IMVP-8,30A,PQFN22,45X35	U7270	CRITICAL	DR_MOS_VCCSA:VISHAY

VR DRIVER CPU GT

PART NUMBER	QTY	DESCRIPTION	REFERENCE DES	CRITICAL	BOM OPTION
353S00519	2	IC,SIC621,DR MOS,IMVP-8,60A,PQFN31,5X5MM	U7410,U7420	CRITICAL	DR_MOS_GT:VISHAY

VR INDUCTOR VCCSA

PART NUMBER	QTY	DESCRIPTION	REFERENCE DES	CRITICAL	BOM OPTION
152S00689	1	IND,MLD,0.47UH,4.7MO,17.5A,5.6X5.2X2.4MM	L7270	CRITICAL	IND_VCCSA:CYNTEC

SYNC_MASTER=J213_JOHN SYNC_DATE=06/05/2018

PAGE TITLE
BOM CONFIGURATION

Apple Inc.

DRAWING NUMBER 051-04273 SIZE D

REVISION 4.0.0

BRANCH evt-1

PAGE 400 OF 500

SHEET 91 OF 98

NOTICE OF PROPRIETARY PROPERTY:
THE INFORMATION CONTAINED HEREIN IS THE PROPRIETARY PROPERTY OF APPLE INC.
THE POSESSOR AGREES TO THE FOLLOWING:
I TO MAINTAIN THIS DOCUMENT IN CONFIDENCE
II NOT TO REPRODUCE OR COPY IT
III NOT TO REVEAL OR PUBLISH IT IN WHOLE OR PART
IV ALL RIGHTS RESERVED

NAND U8600

PART NUMBER	QTY	DESCRIPTION	REFERENCE DES	CRITICAL	BOM OPTION
335S00377	1	NAND,3DV4,64GBT,S4E,256G,H,SLGA110	U8600	CRITICAL	NAND_U8600:2DP_HY
335S00393	1	NAND,3DV4,64GBT,S4E,256G,H,SLGA110	U8600	CRITICAL	NAND_U8600:2DP_TS
335S00388	1	NAND,3DV4,64GBT,XXX,S4E,256G,SD,SLGA110	U8600	CRITICAL	NAND_U8600:2DP_WD
335S00416	1	NAND,3DV5,64GBT,S4E,256G,SS,SLGA110	U8600	CRITICAL	NAND_U8600:2DP_SS
335S00394	1	NAND,3DV4,64GBT,S4E,256G,H,SLGA110	U8600	CRITICAL	NAND_U8600:4DP_TS
335S00378	1	NAND,3DV4,128GBT,S4E,256G,H,SLGA110	U8600	CRITICAL	NAND_U8600:4DP_HY
335S00424	1	NAND,3DV5,128GBT,S4E,256G,SS,SLGA110	U8600	CRITICAL	NAND_U8600:4DP_SS
335S00398	1	NAND,3DV4,192GBT,XXX,S4E,256G,H,SLGA110	U8600	CRITICAL	NAND_U8600:6DP_HY
335S00395	1	NAND,3DV4,192GBT,XXX,S4E,256G,T,SLGA110	U8600	CRITICAL	NAND_U8600:6DP_TS
335S00379	1	NAND,3DV4,256GBT,S4E,256G,H,SLGA110	U8600	CRITICAL	NAND_U8600:8DP_HY
335S00327	1	NAND,3DV3,256GBP,133,S4E,170G,SD,ULGA110	U8600	CRITICAL	NAND_U8600:8DP_WD
335S00396	1	NAND,3DV4,256GBT,XXX,S4E,256G,T,SLGA110	U8600	CRITICAL	NAND_U8600:8DP_TS
335S00399	1	NAND,3DV4,320GBT,XXX,S4E,256G,H,SLGA110	U8600	CRITICAL	NAND_U8600:10DP_HY
335S00397	1	NAND,3DV4,320GBT,XXX,S4E,256G,T,SLGA110	U8600	CRITICAL	NAND_U8600:10DP_TS
335S00380	1	NAND,3DV4,512GBT,S4E,256G,H,SLGA110	U8600	CRITICAL	NAND_U8600:16DP_HY
335S00391	1	NAND,3DV4,512GBT,XXX,S4E,256G,SD,SLGA110	U8600	CRITICAL	NAND_U8600:16DP_WD

NAND U8700

PART NUMBER	QTY	DESCRIPTION	REFERENCE DES	CRITICAL	BOM OPTION
335S00377	1	NAND,3DV4,64GBT,S4E,256G,H,SLGA110	U8700	CRITICAL	NAND_U8700:2DP_HY
335S00393	1	NAND,3DV4,64GBT,S4E,256G,H,SLGA110	U8700	CRITICAL	NAND_U8700:2DP_TS
335S00388	1	NAND,3DV4,64GBT,XXX,S4E,256G,SD,SLGA110	U8700	CRITICAL	NAND_U8700:2DP_WD
335S00416	1	NAND,3DV5,64GBT,S4E,256G,SS,SLGA110	U8700	CRITICAL	NAND_U8700:2DP_SS
335S00394	1	NAND,3DV4,64GBT,S4E,256G,H,SLGA110	U8700	CRITICAL	NAND_U8700:4DP_TS
335S00378	1	NAND,3DV4,128GBT,S4E,256G,H,SLGA110	U8700	CRITICAL	NAND_U8700:4DP_HY
335S00424	1	NAND,3DV5,128GBT,S4E,256G,SS,SLGA110	U8700	CRITICAL	NAND_U8700:4DP_SS
335S00398	1	NAND,3DV4,192GBT,XXX,S4E,256G,H,SLGA110	U8700	CRITICAL	NAND_U8700:6DP_HY
335S00395	1	NAND,3DV4,192GBT,XXX,S4E,256G,T,SLGA110	U8700	CRITICAL	NAND_U8700:6DP_TS
335S00379	1	NAND,3DV4,256GBT,S4E,256G,H,SLGA110	U8700	CRITICAL	NAND_U8700:8DP_HY
335S00327	1	NAND,3DV3,256GBP,133,S4E,170G,SD,ULGA110	U8700	CRITICAL	NAND_U8700:8DP_WD
335S00396	1	NAND,3DV4,256GBT,XXX,S4E,256G,T,SLGA110	U8700	CRITICAL	NAND_U8700:8DP_TS
335S00399	1	NAND,3DV4,320GBT,XXX,S4E,256G,H,SLGA110	U8700	CRITICAL	NAND_U8700:10DP_HY
335S00397	1	NAND,3DV4,320GBT,XXX,S4E,256G,T,SLGA110	U8700	CRITICAL	NAND_U8700:10DP_TS
335S00380	1	NAND,3DV4,512GBT,S4E,256G,H,SLGA110	U8700	CRITICAL	NAND_U8700:16DP_HY
335S00391	1	NAND,3DV4,512GBT,XXX,S4E,256G,SD,SLGA110	U8700	CRITICAL	NAND_U8700:16DP_WD

NAND U8800

PART NUMBER	QTY	DESCRIPTION	REFERENCE DES	CRITICAL	BOM OPTION
335S00377	1	NAND,3DV4,64GBT,S4E,256G,H,SLGA110	U8800	CRITICAL	NAND_U8800:2DP_HY
335S00393	1	NAND,3DV4,64GBT,S4E,256G,H,SLGA110	U8800	CRITICAL	NAND_U8800:2DP_TS
335S00388	1	NAND,3DV4,64GBT,XXX,S4E,256G,SD,SLGA110	U8800	CRITICAL	NAND_U8800:2DP_WD
335S00416	1	NAND,3DV5,64GBT,S4E,256G,SS,SLGA110	U8800	CRITICAL	NAND_U8800:2DP_SS
335S00394	1	NAND,3DV4,64GBT,S4E,256G,H,SLGA110	U8800	CRITICAL	NAND_U8800:4DP_TS
335S00378	1	NAND,3DV4,128GBT,S4E,256G,H,SLGA110	U8800	CRITICAL	NAND_U8800:4DP_HY
335S00424	1	NAND,3DV5,128GBT,S4E,256G,SS,SLGA110	U8800	CRITICAL	NAND_U8800:4DP_SS
335S00398	1	NAND,3DV4,192GBT,XXX,S4E,256G,H,SLGA110	U8800	CRITICAL	NAND_U8800:6DP_HY
335S00395	1	NAND,3DV4,192GBT,XXX,S4E,256G,T,SLGA110	U8800	CRITICAL	NAND_U8800:6DP_TS
335S00379	1	NAND,3DV4,256GBT,S4E,256G,H,SLGA110	U8800	CRITICAL	NAND_U8800:8DP_HY
335S00327	1	NAND,3DV3,256GBP,133,S4E,170G,SD,ULGA110	U8800	CRITICAL	NAND_U8800:8DP_WD
335S00396	1	NAND,3DV4,256GBT,XXX,S4E,256G,T,SLGA110	U8800	CRITICAL	NAND_U8800:8DP_TS
335S00399	1	NAND,3DV4,320GBT,XXX,S4E,256G,H,SLGA110	U8800	CRITICAL	NAND_U8800:10DP_HY
335S00397	1	NAND,3DV4,320GBT,XXX,S4E,256G,T,SLGA110	U8800	CRITICAL	NAND_U8800:10DP_TS
335S00380	1	NAND,3DV4,512GBT,S4E,256G,H,SLGA110	U8800	CRITICAL	NAND_U8800:16DP_HY
335S00391	1	NAND,3DV4,512GBT,XXX,S4E,256G,SD,SLGA110	U8800	CRITICAL	NAND_U8800:16DP_WD

NAND U8900

PART NUMBER	QTY	DESCRIPTION	REFERENCE DES	CRITICAL	BOM OPTION
335S00377	1	NAND,3DV4,64GBT,S4E,256G,H,SLGA110	U8900	CRITICAL	NAND_U8900:2DP_HY
335S00393	1	NAND,3DV4,64GBT,S4E,256G,H,SLGA110	U8900	CRITICAL	NAND_U8900:2DP_TS
335S00388	1	NAND,3DV4,64GBT,XXX,S4E,256G,SD,SLGA110	U8900	CRITICAL	NAND_U8900:2DP_WD
335S00416	1	NAND,3DV5,64GBT,S4E,256G,SS,SLGA110	U8900	CRITICAL	NAND_U8900:2DP_SS
335S00394	1	NAND,3DV4,64GBT,S4E,256G,H,SLGA110	U8900	CRITICAL	NAND_U8900:4DP_TS
335S00378	1	NAND,3DV4,128GBT,S4E,256G,H,SLGA110	U8900	CRITICAL	NAND_U8900:4DP_HY
335S00424	1	NAND,3DV5,128GBT,S4E,256G,SS,SLGA110	U8900	CRITICAL	NAND_U8900:4DP_SS
335S00398	1	NAND,3DV4,192GBT,XXX,S4E,256G,H,SLGA110	U8900	CRITICAL	NAND_U8900:6DP_HY
335S00395	1	NAND,3DV4,192GBT,XXX,S4E,256G,T,SLGA110	U8900	CRITICAL	NAND_U8900:6DP_TS
335S00379	1	NAND,3DV4,256GBT,S4E,256G,H,SLGA110	U8900	CRITICAL	NAND_U8900:8DP_HY
335S00327	1	NAND,3DV3,256GBP,133,S4E,170G,SD,ULGA110	U8900	CRITICAL	NAND_U8900:8DP_WD
335S00396	1	NAND,3DV4,256GBT,XXX,S4E,256G,T,SLGA110	U8900	CRITICAL	NAND_U8900:8DP_TS
335S00399	1	NAND,3DV4,320GBT,XXX,S4E,256G,H,SLGA110	U8900	CRITICAL	NAND_U8900:10DP_HY
335S00397	1	NAND,3DV4,320GBT,XXX,S4E,256G,T,SLGA110	U8900	CRITICAL	NAND_U8900:10DP_TS
335S00380	1	NAND,3DV4,512GBT,S4E,256G,H,SLGA110	U8900	CRITICAL	NAND_U8900:16DP_HY
335S00391	1	NAND,3DV4,512GBT,XXX,S4E,256G,SD,SLGA110	U8900	CRITICAL	NAND_U8900:16DP_WD

www.laptopschematics.com

SYNC_MASTER=J213_JOHN SYNC_DATE=06/05/2018

PAGE TITLE

BOM CONFIGURATION

Apple Inc.

DRAWING NUMBER 051-04273 SIZE D

REVISION 4.0.0

BRANCH evt-1

PAGE 401 OF 500

SHEET 92 OF 98

NOTICE OF PROPRIETARY PROPERTY:
THE INFORMATION CONTAINED HEREIN IS THE PROPRIETARY PROPERTY OF APPLE INC.
THE POSESSOR AGREES TO THE FOLLOWING:
I TO MAINTAIN THIS DOCUMENT IN CONFIDENCE
II NOT TO REPRODUCE OR COPY IT
III NOT TO REVEAL OR PUBLISH IT IN WHOLE OR PART
IV ALL RIGHTS RESERVED

COMMON BOM GROUPS

BOM GROUP	BOM OPTIONS
X1536_COMMON_PARTS	SCH,PCB,ALT_CMN,COMMON,ALTERNATE:PART,X1536_USB,X1536_WIRELESS,X1536_X86,X1536_MISC,X1536_T290
X1536_USB	TBT:TR_C1_PRQ,UPC:ACE2_B2,TBT_ROM:EVT
X1536_WIRELESS	MODULE:MUR_ES_3P1,WIFI_ROM:V00,BT_ROM:P1
X1536_X86	EDP_ENABLE,DR_MOS_CORE:VISHAY,DR_MOS_VCCSA:VISHAY,DR_MOS_GT:VISHAY,IND_VCCSA:CYNTEC
X1536_T290	BOARDID3,BOARDID4,BOOTCFG0,BOARDREV1,CALPE_L:OTP_BC,SE:ES2P1_PROD,NAND_VCC:2.5V
X1536_MISC	CHARGER_IC:POC,AMR:POC,BMU_FLEX:POC,SPEAKER_AMP:C0

DEBUG BOM PARTS

BOM GROUP	BOM OPTIONS
X1536_DEV_1	ALT_CMN,ALTERNATE:PART,DBGLED,DBG_FAN,DEBUG_BUTTON,ESPI_DBG,SENSOR:DEV,XDP:YES,XDP_CONN:YES
X1536_DEV_2	SSD_DBG,LOADISNS,LOADRC:YES,USBC_AARDVARKANOID,USBC_ARKANOID,SOC_DBG,DBG_GNDHOOK,WIFI_DBG

DRAM AND SPD

BOM GROUP	BOM OPTIONS
X1536_08GB_HY	DRAM:08GB_HY,RAMCFG4_L,RAMCFG3_L,RAMCFG2_L,RAMCFG1_L,RAMCFG0_L
X1536_08GB_MI	DRAM:08GB_MI,RAMCFG4_L,RAMCFG3_L,RAMCFG2_L,RAMCFG1_L
X1536_08GB_SS	DRAM:08GB_SS,RAMCFG3_L,RAMCFG2_L,RAMCFG0_L
X1536_16GB_HY	DRAM:16GB_HY,RAMCFG4_L,RAMCFG3_L,RAMCFG1_L,RAMCFG0_L
X1536_16GB_MI	DRAM:16GB_MI,RAMCFG4_L,RAMCFG3_L,RAMCFG1_L
X1536_16GB_SS	DRAM:16GB_SS,RAMCFG3_L,RAMCFG0_L
X1536_NO_DRAM	DRAM:OFF

CPU

BOM GROUP	BOM OPTIONS
X1536_CPU_1P4GHZ	CPU:15W_1P4G_QRH7
X1536_CPU_1P7GHZ	CPU:15W_1P7G_QRH6
X1536_CPU_NO_CPU	CPU:OFF

SOC AND NAND

BOM GROUP	BOM OPTIONS
X1536_TLC_128GB_HY	SOC:PROD_B0_1G,SSD:2L,NAND_U8600:2DP_HY,NAND_U8700:2DP_HY
X1536_TLC_128GB_TS	SOC:PROD_B0_1G,SSD:2L,NAND_U8600:2DP_TS,NAND_U8700:2DP_TS
X1536_TLC_256GB_HY	SOC:PROD_B0_1G,SSD:4L,NAND_U8600:4DP_HY,NAND_U8700:2DP_HY,NAND_U8800:2DP_HY,NAND_U8900:2DP_HY
X1536_TLC_256GB_TS	SOC:PROD_B0_1G,SSD:4L,NAND_U8600:4DP_TS,NAND_U8700:2DP_TS,NAND_U8800:2DP_TS,NAND_U8900:2DP_TS
X1536_TLC_256GB_SS	SOC:PROD_B0_1G,SSD:4L,NAND_U8600:4DP_SS,NAND_U8700:2DP_SS,NAND_U8800:2DP_SS,NAND_U8900:2DP_SS
X1536_TLC_512GB_HY	SOC:PROD_B0_1G,SSD:4L,NAND_U8600:6DP_HY,NAND_U8700:6DP_HY,NAND_U8800:4DP_HY,NAND_U8900:4DP_HY
X1536_TLC_512GB_TS	SOC:PROD_B0_1G,SSD:4L,NAND_U8600:6DP_TS,NAND_U8700:6DP_TS,NAND_U8800:4DP_TS,NAND_U8900:4DP_TS
X1536_TLC_001TB_HY	SOC:PROD_B0_2G,SSD:4L,NAND_U8600:10DP_HY,NAND_U8700:10DP_HY,NAND_U8800:8DP_HY,NAND_U8900:8DP_HY
X1536_TLC_001TB_TS	SOC:PROD_B0_2G,SSD:4L,NAND_U8600:10DP_TS,NAND_U8700:10DP_TS,NAND_U8800:8DP_TS,NAND_U8900:8DP_TS
X1536_TLC_002TB_HY	SOC:PROD_B0_2G,SSD:4L,NAND_U8600:16DP_HY,NAND_U8700:16DP_HY,NAND_U8800:16DP_HY,NAND_U8900:16DP_HY
X1536_TLC_002TB_WD	SOC:PROD_B0_2G,SSD:4L,NAND_U8600:16DP_WD,NAND_U8700:16DP_WD,NAND_U8800:16DP_WD,NAND_U8900:16DP_WD
X1536_NO_NAND_2_LD	SOC:PROD_B0_2G,SSD:2L,NAND_U8600:OFF,NAND_U8700:OFF,NAND_U8800:OFF,NAND_U8900:OFF
X1536_NO_NAND_4_LD	SOC:PROD_B0_2G,SSD:4L,NAND_U8600:OFF,NAND_U8700:OFF,NAND_U8800:OFF,NAND_U8900:OFF

SYSTEM PARTS

PART NUMBER	QTY	DESCRIPTION	REFERENCE DES	CRITICAL	BOM OPTION
051-04273	1	SCHEM,MLB COFFEE,X1536	SCH	CRITICAL	SCH
820-01598	1	PCBF,MLB COFFEE,X1536	PCB	CRITICAL	PCB
685-00257	1	COMMON PARTS,MLB COFFEE,X1536	COMMON_PARTS	CRITICAL	X1536_COMMON_BOM
985-00796	1	DEV,COMMON PARTS,MLB COFFEE,X1536	DEV_PARTS	CRITICAL	X1536_DEV_BOM

TOP LEVEL BOM

639-XXXX (POR) OR 939-XXXX (DEV)

COMMON PARTS BOM

685-00257

DEBUG PARTS BOM

985-00796

COMMON PARTS BOM

BOM NUMBER	BOM NAME	BOM OPTIONS
685-00257	COMMON_PARTS,MLB COFFEE,X1536	X1536_COMMON_PARTS

DEBUG PARTS

BOM NUMBER	BOM NAME	BOM OPTIONS
985-00796	DEV,COMMON_PARTS,MLB COFFEE,X1536	X1536_DEV_1,X1536_DEV_2

NOTES:

"SENSOR:DEV" IS FOR SENSE RESISTORS. WHEN CURRENT SENSING IS REMOVED AT DVT, THESE RESISTORS WILL BE REPLACED WITH A SPECIAL SYMBOL, A COPPER SHAPE SHORTING THE TWO TERMINALS

"LOADISNS" ARE CIRCUITS ONLY REQUIRED UNTIL DVT TO MEASURE/SENSE CURRENT. SENSE CIRCUITS REQUIRED BY SMC WILL NOT HAVE THIS OPTION SINCE THEY WILL STAY TILL PVT

"LOADRC:YES/NO" RC FILTERS INTO ADC WILL BE REPLACED BY 100K PD ONCE THE SENSE CIRCUITS GO AWAY

CPU DRAM CFG[4:0] CHART

	DIE REV	CFG 4
	A	0
B		1

	SPEED	CFG 3
	2133	0
	1866	1

	CAPACITY	CFG 2
8GB		0
	16GB	1

VENDOR	CFG 1	CFG 0
HYNIX	0	0
MICRON	0 1	
SAMSUNG	1 0	
N/A	1	1

SYNC_MASTER=J213_JOHN SYNC_DATE=06/05/2018

PAGE TITLE

BOM GROUPS

Apple Inc.

DRAWING NUMBER 051-04273 SIZE D

REVISION 4.0.0

BRANCH evt-1

PAGE 403 OF 500

SHEET 93 OF 98

NOTICE OF PROPRIETARY PROPERTY:
THE INFORMATION CONTAINED HEREIN IS THE PROPRIETARY PROPERTY OF APPLE INC.
THE POSESSOR AGREES TO THE FOLLOWING:
I TO MAINTAIN THIS DOCUMENT IN CONFIDENCE
II NOT TO REPRODUCE OR COPY IT
III NOT TO REVEAL OR PUBLISH IT IN WHOLE OR PART
IV ALL RIGHTS RESERVED

POR BOMS - MLB1 (2.3 GHZ CPU)

BOM NUMBER	BOM NAME	BOM OPTIONS
639-06731	MLB1,HY-8GB,HY-128GB,X1536	ALT_CMN,ALTERNATE:PART,X1536_COMMON_BOM,X1536_DEV_BOM,X1536_CPU_1P4GHZ,X1536_08GB_HY,X1536_TLC_128GB_HY
639-06732	MLB1,HY-16GB,HY-128GB,X1536	ALT_CMN,ALTERNATE:PART,X1536_COMMON_BOM,X1536_DEV_BOM,X1536_CPU_1P4GHZ,X1536_16GB_HY,X1536_TLC_128GB_HY
639-06733	MLB1,MI-8GB,HY-128GB,X1536	ALT_CMN,ALTERNATE:PART,X1536_COMMON_BOM,X1536_DEV_BOM,X1536_CPU_1P4GHZ,X1536_08GB_MI,X1536_TLC_128GB_HY
639-06734	MLB1,MI-16GB,HY-128GB,X1536	ALT_CMN,ALTERNATE:PART,X1536_COMMON_BOM,X1536_DEV_BOM,X1536_CPU_1P4GHZ,X1536_16GB_MI,X1536_TLC_128GB_HY
639-06735	MLB1,SS-8GB,HY-128GB,X1536	ALT_CMN,ALTERNATE:PART,X1536_COMMON_BOM,X1536_DEV_BOM,X1536_CPU_1P4GHZ,X1536_08GB_SS,X1536_TLC_128GB_HY
639-06736	MLB1,SS-16GB,HY-128GB,X1536	ALT_CMN,ALTERNATE:PART,X1536_COMMON_BOM,X1536_DEV_BOM,X1536_CPU_1P4GHZ,X1536_16GB_SS,X1536_TLC_128GB_HY
639-07155	MLB1,HY-8GB,TS-128GB,X1536	ALT_CMN,ALTERNATE:PART,X1536_COMMON_BOM,X1536_DEV_BOM,X1536_CPU_1P4GHZ,X1536_08GB_HY,X1536_TLC_128GB_TS
639-07156	MLB1,HY-16GB,TS-128GB,X1536	ALT_CMN,ALTERNATE:PART,X1536_COMMON_BOM,X1536_DEV_BOM,X1536_CPU_1P4GHZ,X1536_16GB_HY,X1536_TLC_128GB_TS
639-07157	MLB1,MI-8GB,TS-128GB,X1536	ALT_CMN,ALTERNATE:PART,X1536_COMMON_BOM,X1536_DEV_BOM,X1536_CPU_1P4GHZ,X1536_08GB_MI,X1536_TLC_128GB_TS
639-07158	MLB1,MI-16GB,TS-128GB,X1536	ALT_CMN,ALTERNATE:PART,X1536_COMMON_BOM,X1536_DEV_BOM,X1536_CPU_1P4GHZ,X1536_16GB_MI,X1536_TLC_128GB_TS
639-07159	MLB1,SS-8GB,TS-128GB,X1536	ALT_CMN,ALTERNATE:PART,X1536_COMMON_BOM,X1536_DEV_BOM,X1536_CPU_1P4GHZ,X1536_08GB_SS,X1536_TLC_128GB_TS
639-07160	MLB1,SS-16GB,TS-128GB,X1536	ALT_CMN,ALTERNATE:PART,X1536_COMMON_BOM,X1536_DEV_BOM,X1536_CPU_1P4GHZ,X1536_16GB_SS,X1536_TLC_128GB_TS
639-06737	MLB1,HY-8GB,HY-256GB,X1536	ALT_CMN,ALTERNATE:PART,X1536_COMMON_BOM,X1536_DEV_BOM,X1536_CPU_1P4GHZ,X1536_08GB_HY,X1536_TLC_256GB_HY
639-06738	MLB1,HY-16GB,HY-256GB,X1536	ALT_CMN,ALTERNATE:PART,X1536_COMMON_BOM,X1536_DEV_BOM,X1536_CPU_1P4GHZ,X1536_16GB_HY,X1536_TLC_256GB_HY
639-06739	MLB1,MI-8GB,HY-256GB,X1536	ALT_CMN,ALTERNATE:PART,X1536_COMMON_BOM,X1536_DEV_BOM,X1536_CPU_1P4GHZ,X1536_08GB_MI,X1536_TLC_256GB_HY
639-06740	MLB1,MI-16GB,HY-256GB,X1536	ALT_CMN,ALTERNATE:PART,X1536_COMMON_BOM,X1536_DEV_BOM,X1536_CPU_1P4GHZ,X1536_16GB_MI,X1536_TLC_256GB_HY
639-06741	MLB1,SS-8GB,HY-256GB,X1536	ALT_CMN,ALTERNATE:PART,X1536_COMMON_BOM,X1536_DEV_BOM,X1536_CPU_1P4GHZ,X1536_08GB_SS,X1536_TLC_256GB_HY
639-06742	MLB1,SS-16GB,HY-256GB,X1536	ALT_CMN,ALTERNATE:PART,X1536_COMMON_BOM,X1536_DEV_BOM,X1536_CPU_1P4GHZ,X1536_16GB_SS,X1536_TLC_256GB_HY
639-07161	MLB1,HY-8GB,TS-256GB,X1536	ALT_CMN,ALTERNATE:PART,X1536_COMMON_BOM,X1536_DEV_BOM,X1536_CPU_1P4GHZ,X1536_08GB_HY,X1536_TLC_256GB_TS
639-07162	MLB1,HY-16GB,TS-256GB,X1536	ALT_CMN,ALTERNATE:PART,X1536_COMMON_BOM,X1536_DEV_BOM,X1536_CPU_1P4GHZ,X1536_16GB_HY,X1536_TLC_256GB_TS
639-07163	MLB1,MI-8GB,TS-256GB,X1536	ALT_CMN,ALTERNATE:PART,X1536_COMMON_BOM,X1536_DEV_BOM,X1536_CPU_1P4GHZ,X1536_08GB_MI,X1536_TLC_256GB_TS
639-07164	MLB1,MI-16GB,TS-256GB,X1536	ALT_CMN,ALTERNATE:PART,X1536_COMMON_BOM,X1536_DEV_BOM,X1536_CPU_1P4GHZ,X1536_16GB_MI,X1536_TLC_256GB_TS
639-07165	MLB1,SS-8GB,TS-256GB,X1536	ALT_CMN,ALTERNATE:PART,X1536_COMMON_BOM,X1536_DEV_BOM,X1536_CPU_1P4GHZ,X1536_08GB_SS,X1536_TLC_256GB_TS
639-07166	MLB1,SS-16GB,TS-256GB,X1536	ALT_CMN,ALTERNATE:PART,X1536_COMMON_BOM,X1536_DEV_BOM,X1536_CPU_1P4GHZ,X1536_16GB_SS,X1536_TLC_256GB_TS
639-06743	MLB1,HY-8GB,HY-512GB,X1536	ALT_CMN,ALTERNATE:PART,X1536_COMMON_BOM,X1536_DEV_BOM,X1536_CPU_1P4GHZ,X1536_08GB_HY,X1536_TLC_512GB_HY
639-06744	MLB1,HY-16GB,HY-512GB,X1536	ALT_CMN,ALTERNATE:PART,X1536_COMMON_BOM,X1536_DEV_BOM,X1536_CPU_1P4GHZ,X1536_16GB_HY,X1536_TLC_512GB_HY
639-06745	MLB1,MI-8GB,HY-512GB,X1536	ALT_CMN,ALTERNATE:PART,X1536_COMMON_BOM,X1536_DEV_BOM,X1536_CPU_1P4GHZ,X1536_08GB_MI,X1536_TLC_512GB_HY
639-06746	MLB1,MI-16GB,HY-512GB,X1536	ALT_CMN,ALTERNATE:PART,X1536_COMMON_BOM,X1536_DEV_BOM,X1536_CPU_1P4GHZ,X1536_16GB_MI,X1536_TLC_512GB_HY
639-06747	MLB1,SS-8GB,HY-512GB,X1536	ALT_CMN,ALTERNATE:PART,X1536_COMMON_BOM,X1536_DEV_BOM,X1536_CPU_1P4GHZ,X1536_08GB_SS,X1536_TLC_512GB_HY
639-06748	MLB1,SS-16GB,HY-512GB,X1536	ALT_CMN,ALTERNATE:PART,X1536_COMMON_BOM,X1536_DEV_BOM,X1536_CPU_1P4GHZ,X1536_16GB_SS,X1536_TLC_512GB_HY
639-07167	MLB1,HY-8GB,TS-512GB,X1536	ALT_CMN,ALTERNATE:PART,X1536_COMMON_BOM,X1536_DEV_BOM,X1536_CPU_1P4GHZ,X1536_08GB_HY,X1536_TLC_512GB_TS
639-07168	MLB1,HY-16GB,TS-512GB,X1536	ALT_CMN,ALTERNATE:PART,X1536_COMMON_BOM,X1536_DEV_BOM,X1536_CPU_1P4GHZ,X1536_16GB_HY,X1536_TLC_512GB_TS
639-07169	MLB1,MI-8GB,TS-512GB,X1536	ALT_CMN,ALTERNATE:PART,X1536_COMMON_BOM,X1536_DEV_BOM,X1536_CPU_1P4GHZ,X1536_08GB_MI,X1536_TLC_512GB_TS
639-07170	MLB1,MI-16GB,TS-512GB,X1536	ALT_CMN,ALTERNATE:PART,X1536_COMMON_BOM,X1536_DEV_BOM,X1536_CPU_1P4GHZ,X1536_16GB_MI,X1536_TLC_512GB_TS
639-07171	MLB1,SS-8GB,TS-512GB,X1536	ALT_CMN,ALTERNATE:PART,X1536_COMMON_BOM,X1536_DEV_BOM,X1536_CPU_1P4GHZ,X1536_08GB_SS,X1536_TLC_512GB_TS
639-07172	MLB1,SS-16GB,TS-512GB,X1536	ALT_CMN,ALTERNATE:PART,X1536_COMMON_BOM,X1536_DEV_BOM,X1536_CPU_1P4GHZ,X1536_16GB_SS,X1536_TLC_512GB_TS
639-06749	MLB1,HY-8GB,HY-1TB,X1536	ALT_CMN,ALTERNATE:PART,X1536_COMMON_BOM,X1536_DEV_BOM,X1536_CPU_1P4GHZ,X1536_08GB_HY,X1536_TLC_001TB_HY
639-06750	MLB1,HY-16GB,HY-1TB,X1536	ALT_CMN,ALTERNATE:PART,X1536_COMMON_BOM,X1536_DEV_BOM,X1536_CPU_1P4GHZ,X1536_16GB_HY,X1536_TLC_001TB_HY
639-06751	MLB1,MI-8GB,HY-1TB,X1536	ALT_CMN,ALTERNATE:PART,X1536_COMMON_BOM,X1536_DEV_BOM,X1536_CPU_1P4GHZ,X1536_08GB_MI,X1536_TLC_001TB_HY
639-06752	MLB1,MI-16GB,HY-1TB,X1536	ALT_CMN,ALTERNATE:PART,X1536_COMMON_BOM,X1536_DEV_BOM,X1536_CPU_1P4GHZ,X1536_16GB_MI,X1536_TLC_001TB_HY
639-06753	MLB1,SS-8GB,HY-1TB,X1536	ALT_CMN,ALTERNATE:PART,X1536_COMMON_BOM,X1536_DEV_BOM,X1536_CPU_1P4GHZ,X1536_08GB_SS,X1536_TLC_001TB_HY
639-06754	MLB1,SS-16GB,HY-1TB,X1536	ALT_CMN,ALTERNATE:PART,X1536_COMMON_BOM,X1536_DEV_BOM,X1536_CPU_1P4GHZ,X1536_16GB_SS,X1536_TLC_001TB_HY
639-07173	MLB1,HY-8GB,TS-1TB,X1536	ALT_CMN,ALTERNATE:PART,X1536_COMMON_BOM,X1536_DEV_BOM,X1536_CPU_1P4GHZ,X1536_08GB_HY,X1536_TLC_001TB_TS
639-07174	MLB1,HY-16GB,TS-1TB,X1536	ALT_CMN,ALTERNATE:PART,X1536_COMMON_BOM,X1536_DEV_BOM,X1536_CPU_1P4GHZ,X1536_16GB_HY,X1536_TLC_001TB_TS
639-07175	MLB1,MI-8GB,TS-1TB,X1536	ALT_CMN,ALTERNATE:PART,X1536_COMMON_BOM,X1536_DEV_BOM,X1536_CPU_1P4GHZ,X1536_08GB_MI,X1536_TLC_001TB_TS
639-07176	MLB1,MI-16GB,TS-1TB,X1536	ALT_CMN,ALTERNATE:PART,X1536_COMMON_BOM,X1536_DEV_BOM,X1536_CPU_1P4GHZ,X1536_16GB_MI,X1536_TLC_001TB_TS
639-07177	MLB1,SS-8GB,TS-1TB,X1536	ALT_CMN,ALTERNATE:PART,X1536_COMMON_BOM,X1536_DEV_BOM,X1536_CPU_1P4GHZ,X1536_08GB_SS,X1536_TLC_001TB_TS
639-07178	MLB1,SS-16GB,TS-1TB,X1536	ALT_CMN,ALTERNATE:PART,X1536_COMMON_BOM,X1536_DEV_BOM,X1536_CPU_1P4GHZ,X1536_16GB_SS,X1536_TLC_001TB_TS
639-06755	MLB1,HY-8GB,HY-2TB,X1536	ALT_CMN,ALTERNATE:PART,X1536_COMMON_BOM,X1536_DEV_BOM,X1536_CPU_1P4GHZ,X1536_08GB_HY,X1536_TLC_002TB_HY
639-06756	MLB1,HY-16GB,HY-2TB,X1536	ALT_CMN,ALTERNATE:PART,X1536_COMMON_BOM,X1536_DEV_BOM,X1536_CPU_1P4GHZ,X1536_16GB_HY,X1536_TLC_002TB_HY
639-06757	MLB1,MI-8GB,HY-2TB,X1536	ALT_CMN,ALTERNATE:PART,X1536_COMMON_BOM,X1536_DEV_BOM,X1536_CPU_1P4GHZ,X1536_08GB_MI,X1536_TLC_002TB_HY
639-06758	MLB1,MI-16GB,HY-2TB,X1536	ALT_CMN,ALTERNATE:PART,X1536_COMMON_BOM,X1536_DEV_BOM,X1536_CPU_1P4GHZ,X1536_16GB_MI,X1536_TLC_002TB_HY
639-06759	MLB1,SS-8GB,HY-2TB,X1536	ALT_CMN,ALTERNATE:PART,X1536_COMMON_BOM,X1536_DEV_BOM,X1536_CPU_1P4GHZ,X1536_08GB_SS,X1536_TLC_002TB_HY
639-06760	MLB1,SS-16GB,HY-2TB,X1536	ALT_CMN,ALTERNATE:PART,X1536_COMMON_BOM,X1536_DEV_BOM,X1536_CPU_1P4GHZ,X1536_16GB_SS,X1536_TLC_002TB_HY
639-07179	MLB1,HY-8GB,WD-2TB,X1536	ALT_CMN,ALTERNATE:PART,X1536_COMMON_BOM,X1536_DEV_BOM,X1536_CPU_1P4GHZ,X1536_08GB_HY,X1536_TLC_002TB_WD
639-07180	MLB1,HY-16GB,WD-2TB,X1536	ALT_CMN,ALTERNATE:PART,X1536_COMMON_BOM,X1536_DEV_BOM,X1536_CPU_1P4GHZ,X1536_16GB_HY,X1536_TLC_002TB_WD
639-07181	MLB1,MI-8GB,WD-2TB,X1536	ALT_CMN,ALTERNATE:PART,X1536_COMMON_BOM,X1536_DEV_BOM,X1536_CPU_1P4GHZ,X1536_08GB_MI,X1536_TLC_002TB_WD
639-07182	MLB1,MI-16GB,WD-2TB,X1536	ALT_CMN,ALTERNATE:PART,X1536_COMMON_BOM,X1536_DEV_BOM,X1536_CPU_1P4GHZ,X1536_16GB_MI,X1536_TLC_002TB_WD
639-07183	MLB1,SS-8GB,WD-2TB,X1536	ALT_CMN,ALTERNATE:PART,X1536_COMMON_BOM,X1536_DEV_BOM,X1536_CPU_1P4GHZ,X1536_08GB_SS,X1536_TLC_002TB_WD
639-07184	MLB1,SS-16GB,WD-2TB,X1536	ALT_CMN,ALTERNATE:PART,X1536_COMMON_BOM,X1536_DEV_BOM,X1536_CPU_1P4GHZ,X1536_16GB_SS,X1536_TLC_002TB_WD

BOM NUMBER	BOM NAME	BOM OPTIONS
639-07608	MLB1,HY-8GB,SS-256GB,X1536	ALT_CMN,ALTERNATE:PART,X1536_COMMON_BOM,X1536_DEV_BOM,X1536_CPU_1P4GHZ,X1536_08GB_HY,X1536_TLC_256GB_SS
639-07609	MLB1,HY-16GB,SS-256GB,X1536	ALT_CMN,ALTERNATE:PART,X1536_COMMON_BOM,X1536_DEV_BOM,X1536_CPU_1P4GHZ,X1536_16GB_HY,X1536_TLC_256GB_SS
639-07610	MLB1,MI-8GB,SS-256GB,X1536	ALT_CMN,ALTERNATE:PART,X1536_COMMON_BOM,X1536_DEV_BOM,X1536_CPU_1P4GHZ,X1536_08GB_MI,X1536_TLC_256GB_SS
639-07611	MLB1,MI-16GB,SS-256GB,X1536	ALT_CMN,ALTERNATE:PART,X1536_COMMON_BOM,X1536_DEV_BOM,X1536_CPU_1P4GHZ,X1536_16GB_MI,X1536_TLC_256GB_SS
639-07612	MLB1,SS-8GB,SS-256GB,X1536	ALT_CMN,ALTERNATE:PART,X1536_COMMON_BOM,X1536_DEV_BOM,X1536_CPU_1P4GHZ,X1536_08GB_SS,X1536_TLC_256GB_SS
639-07613	MLB1,SS-16GB,SS-256GB,X1536	ALT_CMN,ALTERNATE:PART,X1536_COMMON_BOM,X1536_DEV_BOM,X1536_CPU_1P4GHZ,X1536_16GB_SS,X1536_TLC_256GB_SS

SYNC_MASTER=J213_JOHN SYNC_DATE=06/05/2018

PAGE TITLE
BOM VARIANT TABLES

Apple Inc.

DRAWING NUMBER 051-04273 SIZE D

REVISION 4.0.0

BRANCH evt-1

PAGE 405 OF 500

SHEET 94 OF 98

NOTICE OF PROPRIETARY PROPERTY:
THE INFORMATION CONTAINED HEREIN IS THE PROPRIETARY PROPERTY OF APPLE INC.
THE POSESSOR AGREES TO THE FOLLOWING:
I TO MAINTAIN THIS DOCUMENT IN CONFIDENCE
II NOT TO REPRODUCE OR COPY IT
III NOT TO REVEAL OR PUBLISH IT IN WHOLE OR PART
IV ALL RIGHTS RESERVED

POR BOMS - MLB2 (2.7 GHZ CPU)

BOM NUMBER	BOM NAME	BOM OPTIONS
639-07113	MLB2,HY-8GB,HY-128GB,X1536	ALT_CMN,ALTERNATE:PART,X1536_COMMON_BOM,X1536_DEV_BOM,X1536_CPU_1P7GHZ,X1536_08GB_HY,X1536_TLC_128GB_HY
639-07114	MLB2,HY-16GB,HY-128GB,X1536	ALT_CMN,ALTERNATE:PART,X1536_COMMON_BOM,X1536_DEV_BOM,X1536_CPU_1P7GHZ,X1536_16GB_HY,X1536_TLC_128GB_HY
639-07115	MLB2,MI-8GB,HY-128GB,X1536	ALT_CMN,ALTERNATE:PART,X1536_COMMON_BOM,X1536_DEV_BOM,X1536_CPU_1P7GHZ,X1536_08GB_MI,X1536_TLC_128GB_HY
639-07116	MLB2,MI-16GB,HY-128GB,X1536	ALT_CMN,ALTERNATE:PART,X1536_COMMON_BOM,X1536_DEV_BOM,X1536_CPU_1P7GHZ,X1536_16GB_MI,X1536_TLC_128GB_HY
639-07117	MLB2,SS-8GB,HY-128GB,X1536	ALT_CMN,ALTERNATE:PART,X1536_COMMON_BOM,X1536_DEV_BOM,X1536_CPU_1P7GHZ,X1536_08GB_SS,X1536_TLC_128GB_HY
639-07118	MLB2,SS-16GB,HY-128GB,X1536	ALT_CMN,ALTERNATE:PART,X1536_COMMON_BOM,X1536_DEV_BOM,X1536_CPU_1P7GHZ,X1536_16GB_SS,X1536_TLC_128GB_HY
639-07185	MLB2,HY-8GB,TS-128GB,X1536	ALT_CMN,ALTERNATE:PART,X1536_COMMON_BOM,X1536_DEV_BOM,X1536_CPU_1P7GHZ,X1536_08GB_HY,X1536_TLC_128GB_TS
639-07186	MLB2,HY-16GB,TS-128GB,X1536	ALT_CMN,ALTERNATE:PART,X1536_COMMON_BOM,X1536_DEV_BOM,X1536_CPU_1P7GHZ,X1536_16GB_HY,X1536_TLC_128GB_TS
639-07187	MLB2,MI-8GB,TS-128GB,X1536	ALT_CMN,ALTERNATE:PART,X1536_COMMON_BOM,X1536_DEV_BOM,X1536_CPU_1P7GHZ,X1536_08GB_MI,X1536_TLC_128GB_TS
639-07188	MLB2,MI-16GB,TS-128GB,X1536	ALT_CMN,ALTERNATE:PART,X1536_COMMON_BOM,X1536_DEV_BOM,X1536_CPU_1P7GHZ,X1536_16GB_MI,X1536_TLC_128GB_TS
639-07189	MLB2,SS-8GB,TS-128GB,X1536	ALT_CMN,ALTERNATE:PART,X1536_COMMON_BOM,X1536_DEV_BOM,X1536_CPU_1P7GHZ,X1536_08GB_SS,X1536_TLC_128GB_TS
639-07190	MLB2,SS-16GB,TS-128GB,X1536	ALT_CMN,ALTERNATE:PART,X1536_COMMON_BOM,X1536_DEV_BOM,X1536_CPU_1P7GHZ,X1536_16GB_SS,X1536_TLC_128GB_TS
639-07125	MLB2,HY-8GB,HY-256GB,X1536	ALT_CMN,ALTERNATE:PART,X1536_COMMON_BOM,X1536_DEV_BOM,X1536_CPU_1P7GHZ,X1536_08GB_HY,X1536_TLC_256GB_HY
639-07126	MLB2,HY-16GB,HY-256GB,X1536	ALT_CMN,ALTERNATE:PART,X1536_COMMON_BOM,X1536_DEV_BOM,X1536_CPU_1P7GHZ,X1536_16GB_HY,X1536_TLC_256GB_HY
639-07127	MLB2,MI-8GB,HY-256GB,X1536	ALT_CMN,ALTERNATE:PART,X1536_COMMON_BOM,X1536_DEV_BOM,X1536_CPU_1P7GHZ,X1536_08GB_MI,X1536_TLC_256GB_HY
639-07128	MLB2,MI-16GB,HY-256GB,X1536	ALT_CMN,ALTERNATE:PART,X1536_COMMON_BOM,X1536_DEV_BOM,X1536_CPU_1P7GHZ,X1536_16GB_MI,X1536_TLC_256GB_HY
639-07129	MLB2,SS-8GB,HY-256GB,X1536	ALT_CMN,ALTERNATE:PART,X1536_COMMON_BOM,X1536_DEV_BOM,X1536_CPU_1P7GHZ,X1536_08GB_SS,X1536_TLC_256GB_HY
639-07130	MLB2,SS-16GB,HY-256GB,X1536	ALT_CMN,ALTERNATE:PART,X1536_COMMON_BOM,X1536_DEV_BOM,X1536_CPU_1P7GHZ,X1536_16GB_SS,X1536_TLC_256GB_HY
639-07191	MLB2,HY-8GB,TS-256GB,X1536	ALT_CMN,ALTERNATE:PART,X1536_COMMON_BOM,X1536_DEV_BOM,X1536_CPU_1P7GHZ,X1536_08GB_HY,X1536_TLC_256GB_TS
639-07192	MLB2,HY-16GB,TS-256GB,X1536	ALT_CMN,ALTERNATE:PART,X1536_COMMON_BOM,X1536_DEV_BOM,X1536_CPU_1P7GHZ,X1536_16GB_HY,X1536_TLC_256GB_TS
639-07193	MLB2,MI-8GB,TS-256GB,X1536	ALT_CMN,ALTERNATE:PART,X1536_COMMON_BOM,X1536_DEV_BOM,X1536_CPU_1P7GHZ,X1536_08GB_MI,X1536_TLC_256GB_TS
639-07194	MLB2,MI-16GB,TS-256GB,X1536	ALT_CMN,ALTERNATE:PART,X1536_COMMON_BOM,X1536_DEV_BOM,X1536_CPU_1P7GHZ,X1536_16GB_MI,X1536_TLC_256GB_TS
639-07195	MLB2,SS-8GB,TS-256GB,X1536	ALT_CMN,ALTERNATE:PART,X1536_COMMON_BOM,X1536_DEV_BOM,X1536_CPU_1P7GHZ,X1536_08GB_SS,X1536_TLC_256GB_TS
639-07196	MLB2,SS-16GB,TS-256GB,X1536	ALT_CMN,ALTERNATE:PART,X1536_COMMON_BOM,X1536_DEV_BOM,X1536_CPU_1P7GHZ,X1536_16GB_SS,X1536_TLC_256GB_TS
639-07137	MLB2,HY-8GB,HY-512GB,X1536	ALT_CMN,ALTERNATE:PART,X1536_COMMON_BOM,X1536_DEV_BOM,X1536_CPU_1P7GHZ,X1536_08GB_HY,X1536_TLC_512GB_HY
639-07138	MLB2,HY-16GB,HY-512GB,X1536	ALT_CMN,ALTERNATE:PART,X1536_COMMON_BOM,X1536_DEV_BOM,X1536_CPU_1P7GHZ,X1536_16GB_HY,X1536_TLC_512GB_HY
639-07139	MLB2,MI-8GB,HY-512GB,X1536	ALT_CMN,ALTERNATE:PART,X1536_COMMON_BOM,X1536_DEV_BOM,X1536_CPU_1P7GHZ,X1536_08GB_MI,X1536_TLC_512GB_HY
639-07140	MLB2,MI-16GB,HY-512GB,X1536	ALT_CMN,ALTERNATE:PART,X1536_COMMON_BOM,X1536_DEV_BOM,X1536_CPU_1P7GHZ,X1536_16GB_MI,X1536_TLC_512GB_HY
639-07141	MLB2,SS-8GB,HY-512GB,X1536	ALT_CMN,ALTERNATE:PART,X1536_COMMON_BOM,X1536_DEV_BOM,X1536_CPU_1P7GHZ,X1536_08GB_SS,X1536_TLC_512GB_HY
639-07142	MLB2,SS-16GB,HY-512GB,X1536	ALT_CMN,ALTERNATE:PART,X1536_COMMON_BOM,X1536_DEV_BOM,X1536_CPU_1P7GHZ,X1536_16GB_SS,X1536_TLC_512GB_HY
639-07197	MLB2,HY-8GB,TS-512GB,X1536	ALT_CMN,ALTERNATE:PART,X1536_COMMON_BOM,X1536_DEV_BOM,X1536_CPU_1P7GHZ,X1536_08GB_HY,X1536_TLC_512GB_TS
639-07198	MLB2,HY-16GB,TS-512GB,X1536	ALT_CMN,ALTERNATE:PART,X1536_COMMON_BOM,X1536_DEV_BOM,X1536_CPU_1P7GHZ,X1536_16GB_HY,X1536_TLC_512GB_TS
639-07199	MLB2,MI-8GB,TS-512GB,X1536	ALT_CMN,ALTERNATE:PART,X1536_COMMON_BOM,X1536_DEV_BOM,X1536_CPU_1P7GHZ,X1536_08GB_MI,X1536_TLC_512GB_TS
639-07200	MLB2,MI-16GB,TS-512GB,X1536	ALT_CMN,ALTERNATE:PART,X1536_COMMON_BOM,X1536_DEV_BOM,X1536_CPU_1P7GHZ,X1536_16GB_MI,X1536_TLC_512GB_TS
639-07201	MLB2,SS-8GB,TS-512GB,X1536	ALT_CMN,ALTERNATE:PART,X1536_COMMON_BOM,X1536_DEV_BOM,X1536_CPU_1P7GHZ,X1536_08GB_SS,X1536_TLC_512GB_TS
639-07202	MLB2,SS-16GB,TS-512GB,X1536	ALT_CMN,ALTERNATE:PART,X1536_COMMON_BOM,X1536_DEV_BOM,X1536_CPU_1P7GHZ,X1536_16GB_SS,X1536_TLC_512GB_TS
639-07143	MLB2,HY-8GB,HY-1TB,X1536	ALT_CMN,ALTERNATE:PART,X1536_COMMON_BOM,X1536_DEV_BOM,X1536_CPU_1P7GHZ,X1536_08GB_HY,X1536_TLC_001TB_HY
639-07144	MLB2,HY-16GB,HY-1TB,X1536	ALT_CMN,ALTERNATE:PART,X1536_COMMON_BOM,X1536_DEV_BOM,X1536_CPU_1P7GHZ,X1536_16GB_HY,X1536_TLC_001TB_HY
639-07145	MLB2,MI-8GB,HY-1TB,X1536	ALT_CMN,ALTERNATE:PART,X1536_COMMON_BOM,X1536_DEV_BOM,X1536_CPU_1P7GHZ,X1536_08GB_MI,X1536_TLC_001TB_HY
639-07146	MLB2,MI-16GB,HY-1TB,X1536	ALT_CMN,ALTERNATE:PART,X1536_COMMON_BOM,X1536_DEV_BOM,X1536_CPU_1P7GHZ,X1536_16GB_MI,X1536_TLC_001TB_HY
639-07147	MLB2,SS-8GB,HY-1TB,X1536	ALT_CMN,ALTERNATE:PART,X1536_COMMON_BOM,X1536_DEV_BOM,X1536_CPU_1P7GHZ,X1536_08GB_SS,X1536_TLC_001TB_HY
639-07148	MLB2,SS-16GB,HY-1TB,X1536	ALT_CMN,ALTERNATE:PART,X1536_COMMON_BOM,X1536_DEV_BOM,X1536_CPU_1P7GHZ,X1536_16GB_SS,X1536_TLC_001TB_HY
639-07203	MLB2,HY-8GB,TS-1TB,X1536	ALT_CMN,ALTERNATE:PART,X1536_COMMON_BOM,X1536_DEV_BOM,X1536_CPU_1P7GHZ,X1536_08GB_HY,X1536_TLC_001TB_TS
639-07204	MLB2,HY-16GB,TS-1TB,X1536	ALT_CMN,ALTERNATE:PART,X1536_COMMON_BOM,X1536_DEV_BOM,X1536_CPU_1P7GHZ,X1536_16GB_HY,X1536_TLC_001TB_TS
639-07205	MLB2,MI-8GB,TS-1TB,X1536	ALT_CMN,ALTERNATE:PART,X1536_COMMON_BOM,X1536_DEV_BOM,X1536_CPU_1P7GHZ,X1536_08GB_MI,X1536_TLC_001TB_TS
639-07206	MLB2,MI-16GB,TS-1TB,X1536	ALT_CMN,ALTERNATE:PART,X1536_COMMON_BOM,X1536_DEV_BOM,X1536_CPU_1P7GHZ,X1536_16GB_MI,X1536_TLC_001TB_TS
639-07207	MLB2,SS-8GB,TS-1TB,X1536	ALT_CMN,ALTERNATE:PART,X1536_COMMON_BOM,X1536_DEV_BOM,X1536_CPU_1P7GHZ,X1536_08GB_SS,X1536_TLC_001TB_TS
639-07208	MLB2,SS-16GB,TS-1TB,X1536	ALT_CMN,ALTERNATE:PART,X1536_COMMON_BOM,X1536_DEV_BOM,X1536_CPU_1P7GHZ,X1536_16GB_SS,X1536_TLC_001TB_TS
639-07149	MLB2,HY-8GB,HY-2TB,X1536	ALT_CMN,ALTERNATE:PART,X1536_COMMON_BOM,X1536_DEV_BOM,X1536_CPU_1P7GHZ,X1536_08GB_HY,X1536_TLC_002TB_HY
639-07150	MLB2,HY-16GB,HY-2TB,X1536	ALT_CMN,ALTERNATE:PART,X1536_COMMON_BOM,X1536_DEV_BOM,X1536_CPU_1P7GHZ,X1536_16GB_HY,X1536_TLC_002TB_HY
639-07151	MLB2,MI-8GB,HY-2TB,X1536	ALT_CMN,ALTERNATE:PART,X1536_COMMON_BOM,X1536_DEV_BOM,X1536_CPU_1P7GHZ,X1536_08GB_MI,X1536_TLC_002TB_HY
639-07152	MLB2,MI-16GB,HY-2TB,X1536	ALT_CMN,ALTERNATE:PART,X1536_COMMON_BOM,X1536_DEV_BOM,X1536_CPU_1P7GHZ,X1536_16GB_MI,X1536_TLC_002TB_HY
639-07153	MLB2,SS-8GB,HY-2TB,X1536	ALT_CMN,ALTERNATE:PART,X1536_COMMON_BOM,X1536_DEV_BOM,X1536_CPU_1P7GHZ,X1536_08GB_SS,X1536_TLC_002TB_HY
639-07154	MLB2,SS-16GB,HY-2TB,X1536	ALT_CMN,ALTERNATE:PART,X1536_COMMON_BOM,X1536_DEV_BOM,X1536_CPU_1P7GHZ,X1536_16GB_SS,X1536_TLC_002TB_HY
639-07209	MLB2,HY-8GB,WD-2TB,X1536	ALT_CMN,ALTERNATE:PART,X1536_COMMON_BOM,X1536_DEV_BOM,X1536_CPU_1P7GHZ,X1536_08GB_HY,X1536_TLC_002TB_WD
639-07210	MLB2,HY-16GB,WD-2TB,X1536	ALT_CMN,ALTERNATE:PART,X1536_COMMON_BOM,X1536_DEV_BOM,X1536_CPU_1P7GHZ,X1536_16GB_HY,X1536_TLC_002TB_WD
639-07211	MLB2,MI-8GB,WD-2TB,X1536	ALT_CMN,ALTERNATE:PART,X1536_COMMON_BOM,X1536_DEV_BOM,X1536_CPU_1P7GHZ,X1536_08GB_MI,X1536_TLC_002TB_WD
639-07212	MLB2,MI-16GB,WD-2TB,X1536	ALT_CMN,ALTERNATE:PART,X1536_COMMON_BOM,X1536_DEV_BOM,X1536_CPU_1P7GHZ,X1536_16GB_MI,X1536_TLC_002TB_WD
639-07213	MLB2,SS-8GB,WD-2TB,X1536	ALT_CMN,ALTERNATE:PART,X1536_COMMON_BOM,X1536_DEV_BOM,X1536_CPU_1P7GHZ,X1536_08GB_SS,X1536_TLC_002TB_WD
639-07214	MLB2,SS-16GB,WD-2TB,X1536	ALT_CMN,ALTERNATE:PART,X1536_COMMON_BOM,X1536_DEV_BOM,X1536_CPU_1P7GHZ,X1536_16GB_SS,X1536_TLC_002TB_WD

BOM NUMBER	BOM NAME	BOM OPTIONS
639-07614	MLB2,HY-8GB,SS-256GB,X1536	ALT_CMN,ALTERNATE:PART,X1536_COMMON_BOM,X1536_DEV_BOM,X1536_CPU_1P7GHZ,X1536_08GB_HY,X1536_TLC_256GB_SS
639-07615	MLB2,HY-16GB,SS-256GB,X1536	ALT_CMN,ALTERNATE:PART,X1536_COMMON_BOM,X1536_DEV_BOM,X1536_CPU_1P7GHZ,X1536_16GB_HY,X1536_TLC_256GB_SS
639-07616	MLB2,MI-8GB,SS-256GB,X1536	ALT_CMN,ALTERNATE:PART,X1536_COMMON_BOM,X1536_DEV_BOM,X1536_CPU_1P7GHZ,X1536_08GB_MI,X1536_TLC_256GB_SS
639-07617	MLB2,MI-16GB,SS-256GB,X1536	ALT_CMN,ALTERNATE:PART,X1536_COMMON_BOM,X1536_DEV_BOM,X1536_CPU_1P7GHZ,X1536_16GB_MI,X1536_TLC_256GB_SS
639-07618	MLB2,SS-8GB,SS-256GB,X1536	ALT_CMN,ALTERNATE:PART,X1536_COMMON_BOM,X1536_DEV_BOM,X1536_CPU_1P7GHZ,X1536_08GB_SS,X1536_TLC_256GB_SS
639-07619	MLB2,SS-16GB,SS-256GB,X1536	ALT_CMN,ALTERNATE:PART,X1536_COMMON_BOM,X1536_DEV_BOM,X1536_CPU_1P7GHZ,X1536_16GB_SS,X1536_TLC_256GB_SS

www.appleschematics.com

SYNC_MASTER=J213_JOHN SYNC_DATE=06/05/2018

PAGE TITLE: BOM VARIANT TABLES

Apple Inc.

DRAWING NUMBER: 051-04273 SIZE: D

REVISION: 4.0.0

BRANCH: evt-1

PAGE: 406 OF 500

SHEET: 95 OF 98

NOTICE OF PROPRIETARY PROPERTY:
THE INFORMATION CONTAINED HEREIN IS THE PROPRIETARY PROPERTY OF APPLE INC.
THE POSESSOR AGREES TO THE FOLLOWING:
I TO MAINTAIN THIS DOCUMENT IN CONFIDENCE
II NOT TO REPRODUCE OR COPY IT
III NOT TO REVEAL OR PUBLISH IT IN WHOLE OR PART
IV ALL RIGHTS RESERVED

DEV BOMS - NO CPU, NO DRAM, NO SSD

BOM NUMBER	BOM NAME	BOM OPTIONS
939-07159	DEV,MLB,NO-CPU-MEM-NAND,2-LAND,X1536	ALT_CMN,ALTERNATE:PART,X1536_COMMON_BOM,X1536_DEV_BOM,X1536_CPU_NO_CPU,X1536_NO_DRAM,X1536_NO_NAND_2_LD
939-07160	DEV,MLB,NO-CPU-MEM-NAND,4-LAND,X1536	ALT_CMN,ALTERNATE:PART,X1536_COMMON_BOM,X1536_DEV_BOM,X1536_CPU_NO_CPU,X1536_NO_DRAM,X1536_NO_NAND_4_LD

SYNC_MASTER=J213_JOHN SYNC_DATE=06/05/2018

PAGE TITLE
BOM VARIANT TABLES

Apple Inc.

DRAWING NUMBER 051-04273 SIZE D
REVISION 4.0.0
BRANCH evt-1
PAGE 407 OF 500
SHEET 96 OF 98

NOTICE OF PROPRIETARY PROPERTY:
THE INFORMATION CONTAINED HEREIN IS THE PROPRIETARY PROPERTY OF APPLE INC.
THE POSESSOR AGREES TO THE FOLLOWING:
I TO MAINTAIN THIS DOCUMENT IN CONFIDENCE
II NOT TO REPRODUCE OR COPY IT
III NOT TO REVEAL OR PUBLISH IT IN WHOLE OR PART
IV ALL RIGHTS RESERVED

DC-DC

PART NUMBER	ALTERNATE FOR PART NUMBER	BOM OPTION	REF DES	COMMENTS:	Description
152S00403	152S00322	ALT_CMN	ALL	<RDAR://39801983>	MURATA PRIMARY, CHILISIN ALT IND,PWR,0.68UH,20%,6.3A,26MOHM,3225
128S00042	128S0311	ALT_CMN	ALL	<RDAR://40172980>	NEC PRIMARY, KEMET ALTERNATE CAP,TANT,POLY,220UF,6.3V,25MOHM,82
128S[illegible]311		ALT_CMN ALL		<RDAR://40172980>	NEC PRIMARY, PANASONIC ALTERNATE CAP,TANT,POLY,220UF,6.3V,25MOHM,82
128S0[illegible]S0364		ALT_CMN	ALL	<RDAR://44394151>	KEMET PRIMARY, PANASONIC ALTERNATE CAP,AL,POLY,68UF,20%,16V,40MOHM,D2
152S00726	152S00592	ALT_CMN	ALL	<RDAR://40221857>	CYNTEC PRIMARY, CHILISIN ALTERNATE IND,MLD,1UH,2.6A,95MOHM,2012
152S00724	152S00311	ALT_CMN	ALL	<RDAR://40221450>	CYNTEC PRIMARY, CHILISIN ALTERNATE IND,MLD,1UH,20%,3.8A,55MOHM,2016X1.2MM
152S00398	152S00204	ALT_CMN	ALL	<RDAR://40221612>	CYNTEC PRIMARY, TAIYO ALTERNATE IND,PWR,SHLD,0.22UH,6.7A,0.023 OHM,2012
152S00725	152S00590	ALT_CMN	ALL	<RDAR://40223132>	CYNTEC PRIMARY, CHILISIN ALTERNATE IND,MLD,0.47UH,4.8A,34MOHM,2016
152S00363	152S00048	ALT_CMN	ALL	<RDAR://40040471>	CYNTEC PRIMARY, NEC ALTERNATE IND,MLD,0.22UH,1.9MO,44,8.6X8.0X2.4MM
376S[illegible]203		ALT_CMN ALL		<RDAR://40169831>	VISHAY PRIMARY, FAIRCHILD ALTERNATE MOSFET,DL-N,30V,15.6A,13.8MOHM@4.5V,DFN8
376S00[illegible]S00203		ALT_CMN	ALL	<RDAR://40169831>	VISHAY PRIMARY, DIODES ALTERNATE MOSFET,DL-N,30V,15.6A,13.8MOHM@4.5V,DFN8
376S00226	376S00203	ALT_CMN	ALL	<RDAR://40169831>	VISHAY PRIMARY, VISHAY ALTERNATE MOSFET,DL-N,30V,15.6A,13.8MOHM@4.5V,DFN8
152S00786	152S00344	ALT_CMN	ALL	<RDAR://40169331>	MURATA PRIMARY, CYNTEC ALTERNATE IND,MLD,1UH,20%,4.7A,40MOHM,2520
376S00302	376S1038	ALT_CMN	ALL	<RDAR://40169426>	TI PRIMARY, DIODES ALTERNATE MOFET DUAL-N,30V,20A,9.45/3.6MOHN,3X3DFN
376S00007	376S1179	ALT_CMN	ALL	<RDAR://40170031>	VISHAY PRIMARY, AOS ALTERNATE MOSFET,P-CH,20V,40A,0.0039 OHM,8P,PWRPAK
376S[illegible]179		ALT_CMN ALL		<RDAR://40170031>	VISHAY PRIMARY, FAIRCHILD ALTERNATE MOSFET,P-CH,20V,40A,0.0039 OHM,8P,PWRPAK
107S[illegible]011		ALT_CMN ALL		<RDAR://40039575>	CYNTEC PRIMARY, TFT ALTERNATE RES,MTL FLM,0.00075OHM,1%,4-L,0612,BLK
128S0445	128S0436	ALT_CMN	ALL	<RDAR://40172491>	KEMET PRIMARY, PANASONIC ALTERNATE CAP,TANT,POLY,33UF,20%,16V,40MOHM,D12
128S0392	128S0436	ALT_CMN	ALL	<RDAR://40172491>	KEMET PRIMARY, PANASONIC ALTERNATE CAP,TANT,POLY,33UF,20%,16V,40MOHM,D12
353S00831	353S00519	ALT_CMN	ALL	<RDAR://43065874>	VISHAY PRIMARY, FAIRCHILD ALTERNATE IC,SIC621,DR MOS,IMVP-8,60A,PQFN31,5X5MM
353S01831	353S00519	ALT_CMN	ALL	<RDAR://43065874>	VISHAY PRIMARY, AOS ALTERNATE IC,SIC621,DR MOS,IMVP-8,60A,PQFN31,5X5MM
128S00039	128S00038	ALT_CMN	ALL	<RDAR://40173276>	KEMET PRIMARY, NEC ALT CAP,TA,POLY,150UF,20%,6.3V,18MO,2A,B2
128S[illegible]00038		ALT_CMN ALL		<RDAR://40173276>	KEMET PRIMARY, PANASONIC ALT CAP,TA,POLY,150UF,20%,6.3V,18MO,2A,B2
353S00[illegible]S00525		ALT_CMN	ALL	<RDAR://43067934>	VISHAY PRIMARY, FAIRCHILD ALT IC,SIC532,DR MOS,IMVP-8,30A,PQFN22,45X35
152S01024	152S00386	ALT_CMN	ALL	<RDAR://42185308>	MURATA PRIMARY, CHILISIN ALT IND,MLD,1.0UH,20%,32MOHM,4.8A,3225
152S00707	152S00689	ALT_CMN	ALL	<RDAR://43666396>	CYNTEC PRIMARY, CHILISIN ALT IND,MLD,0.47UH,4.7MO,17.5A,5.6X5.2X2.4MM
376S00303	376S00012	ALT_CMN	ALL	<RDAR://43066124>	TI PRIMARY, DIODES ALT MOSFET DUAL-N,30V,15A,18/5.5MOHM,3X3DFN
376S00282	376S1128	ALT_CMN	ALL	<RDAR://43067686>	DIODES PRIMARY, ON SEMI ALT XSTR,FET,N-CH,30V,300MA,3P DFN
376S00224	376S1128	ALT_CMN	ALL	<RDAR://44187449>	DIODES PRIMARY, NEXPERIA ALT XSTR,FET,N-CH,30V,300MA,3P DFN
128S[illegible]351		ALT_CMN ALL		<RDAR://43396612>	SANYO PRIMARY, KEMET ALT CAP,TANT,POLY,330UF,2V,13MOHM,B2
128S00[illegible]S0351		ALT_CMN	ALL	<RDAR://43396612>	SANYO PRIMARY, NEC ALT CAP,TANT,POLY,330UF,2V,13MOHM,B2
152S00841	152S00238	ALT_CMN	ALL	<RDAR://44152899>	CYNTEC PRIMARY, CHILISIN ALT IND,MLD,0.56UH,7.2MO,16A,5.4X5.2X2.4MM
152S00765	152S00239	ALT_CMN	ALL	<RDAR://44155454>	CYNTEC PRIMARY, CHILISIN ALT IND,MLD,0.68UH,9.0MO,14.5A,5.4X5.2X2.4MM
138S00047	138S00073	ALT_CMN	ALL	<RDAR://44159571>	MURATA PRIMARY, TAIYO ALT CAP,X6S,10UF,20%,6.3V,HZTL,MUR,0402
131S00308	131S00037	ALT_CMN	ALL	<RDAR://44160572>	MURATA PRIMARY, YAGEO ALT CAP,CER,C0G,3300PF,5%,50V,0603
107S[illegible]00029		ALT_CMN ALL		<RDAR://44206108>	TFT PRIMARY, YAGEO ALT RES,MTL FLM,0.005OHM,1%,4-L,0612,BLK
128S[illegible]011		ALT_CMN ALL		<RDAR://44202728>	KEMET PRIMARY, NEC ALT CAP,TANT,POLY,6.8UF,20%,35V,90MOHM,B1.2
128S00087	128S00011	ALT_CMN	ALL	<RDAR://44202728>	KEMET PRIMARY, PANASONIC ALT CAP,TANT,POLY,6.8UF,20%,35V,90MOHM,B1.2
128S00031	128S00011	ALT_CMN	ALL	<RDAR://44202728>	KEMET PRIMARY, ROHM ALT CAP,TANT,POLY,6.8UF,20%,35V,90MOHM,B1.2
107S00076	107S00044	ALT_CMN	ALL	<RDAR://44205141>	CYNTEC PRIMARY, YAGEO ALT RES,MF,0.010 OHM,0.5%,0612-4T,BLK
152S00368	152S00269	ALT_CMN	ALL	<RDAR://44243170>	CYNTEC PRIMARY, TOKIN ALT IND,MLD,1.0UH,20%,14A,10.7MO,6.6X6.6X2.4
152S00800	152S00268	ALT_CMN	ALL	<RDAR://44244361>	CYNTEC PRIMARY, NEC-TOKIN ALT IND,MLD,1.5UH,20%,12.5A,17.0MO,7.0X6.6MM
138S[illegible]00060		ALT_CMN ALL		<RDAR://44320030>	138S00060 PRIMARY, 138S00084 ALT CAP,CER,47UF,20%,6.3V,X5R,0603
138S07[illegible]S0941		ALT_CMN	ALL	<RDAR://44323944>	MURATA PRIMARY, SAMSUNG ALT CAP,CER,2.2UF,20%,25V,X5R,HRZTL,0402,MUR
138S00104	138S0978	ALT_CMN	ALL	<RDAR://44325053>	MURATA PRIMARY, TAIYO ALT CAP,CER,2.2UF,20%,25V,X5R,0402,H=0.55MM
152S00383	152S00198	ALT_CMN	ALL	<RDAR://44325096>	CYNTEC PRIMARY, VISHAY ALT IND,MLD,2.7UH,19.6MO,12.5A,10.9X10X2.4MM
152S00680	152S00198	ALT_CMN	ALL	<RDAR://44325096>	CYNTEC PRIMARY, CHILISIN ALT IND,MLD,2.7UH,19.6MO,12.5A,10.9X10X2.4MM
138S0863	138S0853	ALT_CMN	ALL	<RDAR://44326703>	MURATA PRIMARY, TAIYO YUDEN ALT CAP,CER,15UF,20%,2V,X6S,0402,MURATA
138S00229	138S00107	ALT_CMN	ALL	<RDAR://44362824>	MURATA PRIMARY, KYOCERA ALT CAP,X5R,20UF,20%,10V,0402,H=0.8MM
138S[illegible]705		ALT_CMN ALL		<RDAR://44321492>	MURATA PRIMARY, SAMSUNG ALT CAP,CER,X5R,10UF,20%,10V,0402
138S07[illegible]S0705		ALT_CMN	ALL	<RDAR://44321492>	MURATA PRIMARY, TAIYO YUDEN ALT CAP,CER,X5R,10UF,20%,10V,0402
107S0249	107S0251	ALT_CMN	ALL	<RDAR://44364242>	CYNTEC PRIMARY,TFT ALT RES,SENSE,0.002OHM,1W,4-TERM,1%,0612,CYN
132S00012	132S0401	ALT_CMN	ALL	<RDAR://44325754>	TAIYO YUDEN PRIMARY,MURATA ALT CAP,CER,0.22UF,10%,25V,X7R,0402
138S00077	138S00035	ALT_CMN	ALL	<RDAR://44363047>	MURATA PRIMARY,TAIYO ALT CAP,CER,20UF,20%,2.5V,X6S,HRZTL,0402
138S00093	138S00035	ALT_CMN	ALL	<RDAR://44363047>	MURATA PRIMARY,KYOCERA ALT CAP,CER,20UF,20%,2.5V,X6S,HRZTL,0402
132S[illegible]409		ALT_CMN ALL		<RDAR://44325817>	TAIYO PRIMARY,MURATA ALT CAP,CER,X6S,0.1UF,20%,16V,0201
371S[illegible]181		ALT_CMN ALL		<RDAR://44622207>	DIODES PRIMARY,ON SEMI ALT DIODE,ZENER,5.6V,250MW,DFN0201
152S01023	152S00384	ALT_CMN	ALL	<RDAR://44622443>	MURATA PRIMARY, CHILISIN ALT IND,MLD,0.48UH,20%,23MOHM,6.7A,3225
138S00015	138S0777	ALT_CMN	ALL	<RDAR://44658436>	MURATA PRIMARY, TAIYO YUDEN AND SAMSUNG ALT CAP,CER,10UF,20%,16V,X6S,0603
103S0321	103S0276	ALT_CMN	ALL	<RDAR://44660673>	CYNTEC PRIMARY, YAGEO ALT RES,MF,4.42K OHM,1/20W,0.1%,0201,SMD
107S00139	107S0178	ALT_CMN	ALL	<RDAR://44693560>	MURATA PRIMARY, PANASONIC ALT THERMISTOR,NTC,220K OHM,4485K,3%,0201

SYSTEM EE

PART NUMBER	ALTERNATE FOR PART NUMBER	BOM OPTION	REF DES	COMMENTS:	Description
376S1080	376S0820	ALT_CMN	ALL	<RDAR://42561814>	ON SEMI PRIMARY, DIODES ALT XSTR,FET,DUAL COMP,20V,220/200MA,SOT963
353S01505	353S01389	ALT_CMN	ALL	<RDAR://42641759>	TI PRIMARY, ON SEMI ALT IC INA210A,CURRENT SENSE,200V/V,QFN10
353S01041	353S01042	ALT_CMN ALL		<RDAR://42672116>	TI PRIMARY, ST MICRO ALT IC,REF3312,V-REF,1.25V,0.15%,5MA,QFN8
376S00146	376S1061	ALT_CMNALL		<RDAR://42560905>	DIODES PRIMARY, ROHM ALT XSTR,FET,P-CH,30V,400MA,ENH MODE,SOT883
371S00190	371S00085	ALT_CMN	ALL	<RDAR://42639806>	ON SEMI PRIMARY, DIODES ALT DIODE SCHOTTKY,40V,2A,LOW VF,0603
353S00750	353S00877	ALT_CMN	ALL	<RDAR://42677730>	ON SEMI PRIMARY, TI ALT IC,NCP160,LDO REG,1.8V,0.25A,XDFN5
353S01506	353S01404	ALT_CMN	ALL	<RDAR://42641429>	TI PRIMARY, ON SEMI ALT IC,INA214A,CURRENT SENSE,100V/V,QFN10
335S00213	335S0888	ALT_CMN	ALL	<RDAR://43152541>	ST PRIMARY, ON SEMI ALT IC,SERIAL I2C EEPROM,128KBIT,8P,MLP8
353S00636	353S4037	ALT_CMN	ALL	<RDAR://42639994>	DIODES PRIMARY, NXP ALT IC,PI3USB102E,DIFF.USB SW,SPDT,TQFN-10
353S00879	353S00754	ALT_CMN ALL		<RDAR://43151381>	TI PRIMARY, ON SEMI ALT IC,LP5907,LDO REG,1.825V,250MA,X2SON5
353S00878	353S00599	ALT_CMNALL		<RDAR://43151782>	ON SEMI PRIMARY, TI ALT IC,NCP160,LDO REG,3.0V,0.25A,DFN4
311S00138	311S0436	ALT_CMN	ALL	<RDAR://43152801>	TI PRIMARY, NXP ALT IC,74AVC4T245,4BIT VOLT TRANSLATOR,QFP16
311S00060	311S0273	ALT_CMN	ALL	<RDAR://43153429>	PHILLIPS PRIMARY, DIODES ALT IC,74LVC1G32,SNGL 2-INPT OR GATE,SOT891
353S4376	353S3384	ALT_CMN	ALL	<RDAR://43953240>	TI PRIMARY, ON SEMI ALT IC,LMV331,COMP,OPEN COL,2.7V,60UA,SC70
311S0426	311S00007	ALT_CMN	ALL	<RDAR://43955202>	DIODES PRIMARY, NXP ALT IC,74LVC1G07,SNGL BFR W/OD OUT,DFN,6P
311S00192	311S00191	ALT_CMN ALL		<RDAR://43955903>	DIODES PRIMARY, NEXPERIA ALT IC,74LVC1G07,SNGL BFR W/OD OUT,DFN,6P
107S0211	107S0210	ALT_CMN ALL		<RDAR://44198222>	ROHM PRIMARY, VISHAY ALT RES,MTL,.005 OHM,1%,1W,1206
335S00270	335S00203	ALT_CMN	ALL	<RDAR://43152675>	MACRONIX PRIMARY, ADESTO ALT IC,FLASH,SERIAL,SPI,4MX8,1.8V,4X3MM,DFN8
138S00086	138S0884	ALT_CMN	ALL	<RDAR://44320169>	MURATA PRIMARY, TAIYO ALT CAP,CER,X5R,20UF,20%,6.3V,0402,H=0.7MM
138S0714	138S0713	ALT_CMN	ALL	<RDAR://44325434>	MURATA PRIMARY, SAMSUNG ALT CAP,CER,10UF,6.3V,X5R,0.7MM,0402,SAMSUNG
138S0715	138S0732	ALT_CMN	ALL	<RDAR://44325464>	MURATA PRIMARY, SAMSUNG ALT CAP,CER,X5R,1UF,10%,10V,0402,MURATA
138S00111	138S00036	ALT_CMN	ALL	<RDAR://44325659>	MURATA PRIMARY, TAIYO YUDEN ALT CAP,CER,20UF,20%,2.5V,X6S,LOW NOISE,0402
132S00176	132S0640	ALT_CMN ALL		<RDAR://44325857>	MURATA PRIMARY, YAGEO ALT CAP,CER,0.047UH,10%,50V,X7R,0402
311S0596	311S0593	ALT_CMNALL		<RDAR://44345963>	NXP PRIMARY, TI ALT IC,VOLT-LEVEL TRANS,W/CONFIG GATE,SOT886
311S00156	311S00129	ALT_CMN	ALL	<RDAR://44347874>	TI PRIMARY, NEXPERIA ALT IC,XCVR,BUS,4-BIT,DL SPPLY,3-OUT,UQFN16
311S00013	311S0508	ALT_CMN	ALL	<RDAR://44348000>	NEXPERIA PRIMARY, DIODES ALT IC,74AUP1G07,SNGL BUFFER W/OD OUT,SOT891
152S00434	152S1829	ALT_CMN	ALL	<RDAR://44363291>	TDK PRIMARY, CYNTEC ALT IND,PWR,MULT,1UH,20%,0.4A,0.636 OHM,0402
155S00166	155S0391	ALT_CMN	ALL	<RDAR://44364823>	MURATA PRIMARY, TDK ALT FERR BD,220 OHM,25%,700MA,0.28 DCR,0402
155S0660	155S0513	ALT_CMN	ALL	<RDAR://44364960>	TDK PRIMARY, MURATA ALT FERR BD,22 OHM,25%,1A,55 MOHM DCR,0201
155S00018	155S0664	ALT_CMN ALL		<RDAR://44365105>	MURATA PRIMARY, TAIYO ALT FERR BD,80 OHM,25%,500MA,0.18 DCR,0201
155S00007	155S0667	ALT_CMNALL		<RDAR://44365462>	PANASONIC PRIMARY, TAIYO ALT FLTR,COMMON MODE,90 OHM,100MA,0202
311S0562	311S0372	ALT_CMN	ALL	<RDAR://43153066>	NXP PRIMARY, TI ALT IC,VOLT-LEVEL TRANS,W/CONFIG GATE,SOT891
138S00117	138S00071	ALT_CMN	ALL	<RDAR://44325102>	MURATA PRIMARY, KYOCERA ALT CAP,CER,X5R,4UF,20%,6.3V,0201,T=0.55MM
155S0914	155S0897	ALT_CMN	ALL	<RDAR://44391467>	TDK PRIMARY, PANASONIC ALT FLTR,NOISE,2.4GHZ,0.1A,0.65X0.5MM,SMD4
155S00190	155S0897	ALT_CMN	ALL	<RDAR://44391467>	TDK PRIMARY, TAIYO YUDEN ALT FLTR,NOISE,2.4GHZ,0.1A,0.65X0.5MM,SMD4
197S00053	197S00050	ALT_CMN ALL		<RDAR://44391613>	TXC PRIMARY, KYOCERA ALT XTAL,24MHZ,10PPM,8PF,40 OHM,2520
197S00054	197S00050	ALT_CMN ALL		<RDAR://44391613>	TXC PRIMARY, NDK ALT XTAL,24MHZ,10PPM,8PF,40 OHM,2520
197S00055	197S00050	ALT_CMN	ALL	<RDAR://44391613>	TXC PRIMARY, MURATA ALT XTAL,24MHZ,10PPM,8PF,40 OHM,2520
377S00079	377S00077	ALT_CMN	ALL	<RDAR://44391888>	ST MICRO PRIMARY, DIODES ALT TVS,DIODE,UNIDIR,22V,35A,1.6X1.0
377S0077	377S0183	ALT_CMN	ALL	<RDAR://44392851>	INFINEON PRIMARY, ST ALT SUPPR,TRANS,BIDIR,5.5V,6.2PF,0201
311S0271	311S00008	ALT_CMN	ALL	<RDAR://43955521>	DIODES PRIMARY, NXP ALT IC,74LVC1G08,SNGL 2-INPT AND GATE,DFN,6P
311S00036	311S00097	ALT_CMN	ALL	<RDAR://43955649>	DIODES PRIMARY, NXP ALT IC,74LVC2G126,3-ST DUAL BFR,DFN1210-8
155S0694	155S0387	ALT_CMN ALL		<RDAR://44363691>	TDK PRIMARY, MURATA ALT FERRITE BEAD,470OHM,0.1A,1.5MOHM DCR,060
138S1103	138S0719	ALT_CMNALL		<RDAR://44325533>	MURATA PRIMARY, TY ALT CAP,CER,X5R,4.7UF,20%,10V,0402,MURATA
138S0660	138S0684	ALT_CMN	ALL	<RDAR://44325201>	MURATA PRIMARY, TAIYO ALT CAP,CER,10UF,20%,10V,X5R,0603,MURATA
311S00104	311S00091	ALT_CMN	ALL	<RDAR://44346512>	ON SEMI PRIMARY, TI ALT IC,NLSX4402,2BIT DUAL LEVEL XLATOR,DFN8
107S00016	107S0118	ALT_CMN	ALL	<RDAR://44358912>	VISHAY PRIMARY, ROHM ALT RES,FILM,0.001 OHM,1W,1%,1206
138S0914	138S00109	ALT_CMN	ALL	<RDAR://44363107>	KYOCERA PRIMARY, MURATA ALT CAP,X5R,2.2UF,20%,6.3V,0201,0.35MM,KYO
138S00049	138S0831	ALT_CMN	ALL	<RDAR://44621837>	MURATA PRIMARY, KYOCERA ALT CAP,CER,X5R,2.2UF,20%,6.3V,0201
103S00250	103S00249	ALT_CMN ALL		<RDAR://44623255>	MURATA PRIMARY, YAGEO ALT RES,TK,18.2 KOHM,0.1%,TOPPM,1/20W,0201
103S00248	103S00247	ALT_CMNALL		<RDAR://44623345>	CYNTEC PRIMARY, YAGEO ALT RES,TK,8.06 KOHM,0.1%,50PPM,1/20W,0201
376S1137	376S00019	ALT_CMN	ALL	<RDAR://44620634>	DIODES PRIMARY, VISHAY ALT XSTR,FET,N-CH,20V,4.5A,40MOHM,BGA4
138S0750	138S00097	ALT_CMN	ALL	<RDAR://44622531>	TAYIO YUDEN PRIMARY, MURATA ALT CAP,CER,4.7UF,20%,6.3V,X6S,TY,0402
107S00297	107S0085	ALT_CMN	ALL	<RDAR://44623001>	MURATA PRIMARY, TDK ALT THERMISTOR,NTC,100K OHM,1%,0.10MA,0201
353S01346	353S01320	ALT_CMN	ALL	<RDAR://43953321>	NXP PRIMARY, ONSEMI ALT IC,NX3DV642,3-LANE HS SW,TPDT,XQFN24
197S00048	197S00036	ALT_CMN ALL		<RDAR://44391564>	TXC PRIMARY, KYOCERA ALT XTAL,25MHZ,25PPM,20PF,50OHM,500UW,2016
376S00309	376S00074	ALT_CMN ALL		<RDAR://44620855>	TOSHIBA PRIMARY, DIODES ALT MOSFET,DUAL N-CH30V,100MA,6P SOT563
376S00332	376S00074	ALT_CMN	ALL	<RDAR://44620855>	TOSHIBA PRIMARY, NEXPERIA ALT MOSFET,DUAL N-CH30V,100MA,6P SOT563
740S00028	740S0118	ALT_CMN	ALL	<RDAR://44393058>	[illegible] ALT FUSE,12A,32V,1206,FAST ACTING,SMD
138S00056	138S1100	ALT_CMN	ALL	<RDAR://44319895>	MURATA PRIMARY, TAIYO ALT CAP,CER,3-TERM,9.1UF,20%,4V,H0.7MM,0402
155S0665	155S00232	ALT_CMN	ALL	<RDAR://44363532>	TDK PRIMARY, MURATA ALT FERR BD,120 OHMZ,25%,480MA,0.21 OHM,0201
197S00120	197S00118	ALT_CMN	ALL	<RDAR://44391668>	TXC PRIMARY, EPSON ALT XTAL,24MHZ,30PPM,9.5PF,60 OHM MAX,1612
311S00133	311S00130	ALT_CMN ALL		<RDAR://44396487>	NXP PRIMARY, DIODES ALT IC,74AVC1T45,XCVR,DL SUPPLY,1BIT,SON-6
107S00086	107S00056	ALT_CMNALL		<RDAR://44358149>	CYNTEC PRIMARY, TFT ALT RES,SENSE,0.003 OHM,1%,1/2W,0306-4T

SYSTEM EE

PART NUMBER	ALTERNATE FOR PART NUMBER	BOM OPTION	REF DES	COMMENTS:	Description
311S00121	311S0398	ALT_CMN	ALL	<RDAR://43152868>	NXP PRIMARY, DIODES ALT IC,74AUP1G08,2-INPUT AND GATE,SOT891
107S00100	107S00057	ALT_CMN	ALL	<RDAR://44358232>	CYNTEC PRIMARY, TFT ALT RES,MF,0.002 OHM,1%,1/2W,0306-4T
107S00033	107S00[illegible]	ALT_CMN	ALL	<RDAR://44349741>	CYNTEC PRIMARY, TFT ALT RES,MF,0.025 OHM,1%,0612-4T,BLK
155S00067	155S004[illegible]	ALT_CMN	ALL	<RDAR://44653410>	MURATA PRIMARY, TDK ALT FERR BD,240 OHM,25%,350MA,0.38 DCR,0201
138S0706	138S0739	ALT_CMN	ALL	<RDAR://44621676>	SAMSUNG PRIMARY, MURATA ALT CAP,CER,X5R,1UF,20%,10V,0201,SAMSUNG
138S0945	138S0739	ALT_CMN	ALL	<RDAR://44621676>	SAMSUNG PRIMARY, KYOCERA ALT CAP,CER,X5R,1UF,20%,10V,0201,SAMSUNG
152S00864	152S00851	ALT_CMN	ALL	<RDAR://44652690>	TDK PRIMARY, CYNTEC ALT IND,MULT,1.2UH,20%,120MA,1.17 OHM,0402
138S00181	138S0835	ALT_CMN	ALL	<RDAR://44621938>	MURATA PRIMARY, SAMSUNG ALT CAP,CER,3-TERM,4.3UF,20%,4V,0402
371S00185	371S00193	ALT_CMN	ALL	<RDAR://44610883>	ROHM PRIMARY, TOSHIBA ALT DIODE,SCHOTTKY,30V,100MA,0201
311S00196	311S[illegible]	ALT_CMN	ALL	<RDAR://46735900>	DIODES PRIMARY, NEXPERIA ALT IC,74LVC1G08,SNGL 2-INPT AND G,DFN1410-6
377S00123	377S000[illegible]	ALT_CMN	ALL	<RDAR://44391823>	ON SEMI PRIMARY, SEMTECH ALT DIODE,TVS,5.5V,7.3VBR,0.2PF,0201
376S00292	376S00294	ALT_CMN	ALL	<RDAR://43910260>	DIODES PRIMARY, NEXPERIA ALT NFET,20V,1.35A,0.18 OHM,DFN3
107S00346	107S00116	ALT_CMN	ALL	<RDAR://46676880>	CYNTEC PRIMARY, YAGEO ALT RES,MF,0.10 OHM,1%,0.5W,150PPM,0603-4T

H9M

PART NUMBER PART NUMBER	ALTERNATE FOR	BOM OPTION	REF DES	COMMENTS:	Description
339S00387	339S00386	ALT_CMN	ALL	<RDAR://41988491>	MICRON SCK PRIMARY, HYNIX SCK ALT POP,GIBRALTAR+1GB,20NM,M,DEV,SCK,CSP1122
339S00390	339S00386	ALT_CMN	ALL	<RDAR://41988491>	MICRON SCK PRIMARY, MICRON ATK ALT POP,GIBRALTAR+1GB,20NM,M,DEV,SCK,CSP1122
339S00391	339S00386	ALT_CMN	ALL	<RDAR://41988491>	MICRON SCK PRIMARY, HYNIX ATK ALT POP,GIBRALTAR+1GB,20NM,M,DEV,SCK,CSP1122
339S00389	339S00388	ALT_CMN	ALL	<RDAR://41988491>	MICRON SCK PRIMARY, HYNIX SCK ALT POP,GIBRALTAR+2GB,20NM,M,DEV,SCK,CSP1122
339S[illegible]388		ALT_CMN	ALL	<RDAR://41988491>	MICRON SCK PRIMARY, MICRON ATK ALT POP,GIBRALTAR+2GB,20NM,M,DEV,SCK,CSP1122
339S[illegible]388		ALT_CMN	ALL	<RDAR://41988491>	MICRON SCK PRIMARY, HYNIX ATK ALT POP,GIBRALTAR+2GB,20NM,M,DEV,SCK,CSP1122
339S00602	339S00601	ALT_CMN	ALL	<RDAR://41988491>	MICRON SCK PRIMARY, HYNIX SCK ALT POP,GIBRALTAR_L+1GB,16NM,M,B0,SCK,C1122
339S00603	339S00601	ALT_CMN	ALL	<RDAR://41988491>	MICRON SCK PRIMARY, MICRON ATK ALT POP,GIBRALTAR_L+1GB,16NM,M,B0,SCK,C1122
339S00604	339S00601	ALT_CMN	ALL	<RDAR://41988491>	MICRON SCK PRIMARY, HYNIX ATK ALT POP,GIBRALTAR_L+1GB,16NM,M,B0,SCK,C1122
339S00606	339S00605	ALT_CMN	ALL	<RDAR://41988491>	MICRON SCK PRIMARY, HYNIX SCK ALT POP,GIBRALTAR_L+2GB,16NM,M,B0,SCK,C1122
339S00607	339S00605	ALT_CMN	ALL	<RDAR://41988491>	MICRON SCK PRIMARY, MICRON ATK ALT POP,GIBRALTAR_L+2GB,16NM,M,B0,SCK,C1122
339S[illegible]605		ALT_CMN	ALL	<RDAR://41988491>	MICRON SCK PRIMARY, HYNIX ATK ALT POP,GIBRALTAR_L+2GB,16NM,M,B0,SCK,C1122

BACKLIGHT

PART NUMBER	ALTERNATE FOR PART NUMBER	BOM OPTION	REF DES	COMMENTS:	Description
138S0738	138S1101	ALT_CMN	ALL	<RDAR://42360480>	MURATA PRIMARY, SAMSUNG ALT CAP,CER,2.2UF,10%,100V,X5R,1206,T:0.95MM
138S0846	138S0811	ALT_CMN	ALL	<RDAR://42360480>	MURATA PRIMARY, SAMSUNG ALT CAP,CER,4.7UF,10%,25V,X6S,0603
376S1053	376S0604	ALT_CMN	ALL	<RDAR://42360480>	FAIRCHILD PRIMARY, DIODES ALT XSTR,FET,P-CH,20V,4.5A,0.043 OHM,SS0T6
152S[illegible]253		ALT_CMN	ALL	<RDAR://42360480>	CYNTEC PRIMARY, CHILISIN ALT IND,PWR,MLD,15UH,20%,1.9A,240MO,7368X24M
740S00[illegible]S0159		ALT_CMN	ALL	<RDAR://42360480>	LITTLEFUSE PRIMARY, BOURNS ALT FUSE,HIGH INRUSH,32V,3A,0603
371S00077	371S00180	ALT_CMN	ALL	<RDAR://42360480>	DIOES PRIMARY, NXP ALT DIODE,SCHOTTKY,100V,2A,SOD123
376S1106	376S0678	ALT_CMN	ALL	<RDAR://42360480>	VISHAY PRIMARY, FAIRCHILD ALT XSTR,MSFT,N-CH,75V,16A,0.046 OHM

NAND

PART NUMBER PART NUMBER	ALTERNATE FOR	BOM OPTION	REF DES	COMMENTS:	Description
998-17[illegible]S00377		ALT_CMN	ALL	<RDAR://45028102>	HYNIX PRIMARY, HYNIX SUB X ALT NAND,3DV4,64GBT,S4E,256G,H,SLGA110
998-17176	335S00377	ALT_CMN	ALL	<RDAR://45028102>	HYNIX PRIMARY, HYNIX SUB Y ALT NAND,3DV4,64GBT,S4E,256G,H,SLGA110
998-16394	335S00393	ALT_CMN	ALL	<RDAR://45028102>	TOSHIBA PRIMARY, TOSHIBA SUB X ALT NAND,3DV4,64GBT,XXX,S4E,256G,T,SLGA110
998-16395	335S00393	ALT_CMN	ALL	<RDAR://45028102>	TOSHIBA PRIMARY, TOSHIBA SUB Y ALT NAND,3DV4,64GBT,XXX,S4E,256G,T,SLGA110
998-16396	335S00394	ALT_CMN	ALL	<RDAR://45028102>	TOSHIBA PRIMARY, TOSHIBA SUB X ALT NAND,3DV4,128GBT,XXX,S4E,256G,T,SLGA110
998-16397	335S00394	ALT_CMN	ALL	<RDAR://45028102>	TOSHIBA PRIMARY, TOSHIBA SUB Y ALT NAND,3DV4,128GBT,XXX,S4E,256G,T,SLGA110
998[illegible]395		ALT_CMN	ALL	<RDAR://45028102>	TOSHIBA PRIMARY, TOSHIBA SUB X ALT NAND,3DV4,192GBT,XXX,S4E,256G,T,SLGA110
998-16[illegible]S00395		ALT_CMN	ALL	<RDAR://45028102>	TOSHIBA PRIMARY, TOSHIBA SUB Y ALT NAND,3DV4,192GBT,XXX,S4E,256G,T,SLGA110
998-16400	335S00396	ALT_CMN	ALL	<RDAR://45028102>	TOSHIBA PRIMARY, TOSHIBA SUB X ALT NAND,3DV4,256GBT,S4E,256G,T,SUBX,SLGA110
998-16401	335S00396	ALT_CMN	ALL	<RDAR://45028102>	TOSHIBA PRIMARY, TOSHIBA SUB Y ALT NAND,3DV4,256GBT,S4E,256G,T,SUBY,SLGA110

WIFI

PART NUMBER PART NUMBER	ALTERNATE FOR	BOM OPTION	REF DES	COMMENTS:	Description
339S[illegible]616		ALT_CMN	ALL	<RDAR://46651871>	MURATA PRIMARY, USI ALT MODULE,WIFI/BT,SAPPORO,ES3.1,M,LGA451

SYNC_MASTER=J213_JOHN SYNC_DATE=06/05/2018

PAGE TITLE

BOM ALTERNATES

Apple Inc.

DRAWING NUMBER 051-04273 SIZE D

REVISION 4.0.0

BRANCH evt-1

PAGE 410 OF 500

SHEET 97 OF 98

NOTICE OF PROPRIETARY PROPERTY:

THE INFORMATION CONTAINED HEREIN IS THE PROPRIETARY PROPERTY OF APPLE INC.
THE POSESSOR AGREES TO THE FOLLOWING:
I TO MAINTAIN THIS DOCUMENT IN CONFIDENCE
II NOT TO REPRODUCE OR COPY IT
III NOT TO REVEAL OR PUBLISH IT IN WHOLE OR PART
IV ALL RIGHTS RESERVED

RULER_RULE_SET=RIGID_2016 — MANUFACTURING CONFIGURATION — TABLE_REV_NUMBER=1

DIELECTRIC BASED SPACING RULES				DEFAULT SPACING MULTIPLES	VOID SPACE RATIO
MULTIPLES	SMDPIN MAX(UM)	MVIA MAX(UM)	SMDPIN2SMDPIN MAX(UM)		
1,2,3,4,5,6,7,8,9,10,11,12,13,14	120	120	100	1	2

	LAYERS	MINIMUM CU WIDTH RATIO	MINIMUM CU SPACING RATIO	MINIMUM TO DEFAULT RATIO
SIGNAL 1/3 OZ, PLATED TO 0.031 MM	TOP,BOTTOM	2.0	2.36842	1.2
GND PLANE 1/3 OZ, PLATED TO 0.020 MM	ISL2,ISL13	2.25	2.5	1.2
SIGNAL 1/3 OZ, PLATED TO 0.030 MM	ISL3,ISL12	2.0	2.25806	1.2
GND PLANE 1/2 OZ, 0.016 MM	ISL4,ISL11	2.5	2.5	1.2
SIGNAL 1/2 OZ, 0.016 MM	ISL5,ISL10	2.5	2.5	1.2
GND PLANE 1/2 OZ, 0.016 MM	ISL6,ISL9	2.5	2.5	1.2
POWER PLANE 1 OZ, 0.031 MM	ISL7,ISL8	2.0	2.25806	1.2

MANUAL EDITS AFTER AUTOGENERATION:
OVERWROTE THROUGH VIA, BB VIA, AND UVIA SPACINGS TO DEFAULT VALUE, THE AUTOGEN ONES ARE TOO HIGH
UPDATE SAME NET SPACING FOR VIA TO HOLE, UVIA TO SMD PIN, FOR DEFAULT AND MIN, TO -1
CHANGED LINE TO SMD SAME NET SPACING FROM 0.1 TO 0.07 ON TOP/BOTTOM LAYERS
CHANGED MAX NECK LENGTH FOR THE DEFAULT PHYSICAL RULE TO 20MM
CHANGED UVIA TO LINE SAME NET SPACING TO 0.05
CHANGED BB VIA TO LINE, ABD BB VIA TO BB VIA SAME NET SPACING TO 0.0
CHANGED BB VIA TO UVIA SAME NET SPACING TO -1
CHANGED LINE TO SHAPE SAME NET SPACING TO 0.05
SET BB VIA STAGGER IN PHYSICAL RULES TO 0.2500 FOR MIN, 0.275 FOR ALL OTHER, FOR LAYERS 3 AND 12
COPIED THE RULES FROM 85 OHM DIFF TO 85 MIN STAGGER
SET ENABLE DRC BY LAYER IN SAME NET SPACING TO TRUE FOR ALL LAYERS
KEEP DEFAULT AS DEFAULT, GENERIC DP AS GENERIC DP
REPLACING ALL SPACINGS EXCEPT LINE TO LINE WITH DEFAULT VALUES
DECREASED NECK GAP FOR DIFF PAIRS TO VALUE FOR GENERIC DP
REASSIGN SPACING AND PHYSICAL REGION RULES AND NET CLASS ASSIGNMENTS
SET UVIA TO SHAPE SAME NET SPACING TO 0.1MM ON TOP/BOTTOM

SYNC_MASTER=J213_JOHN — SYNC_DATE=06/05/2018

PAGE TITLE: BOARD RULES

Apple Inc.

DRAWING NUMBER: 051-04273 — SIZE: D

REVISION: 4.0.0

BRANCH: evt-1

PAGE: 500 OF 500

SHEET: 98 OF 98

NOTICE OF PROPRIETARY PROPERTY:
THE INFORMATION CONTAINED HEREIN IS THE PROPRIETARY PROPERTY OF APPLE INC.
THE POSESSOR AGREES TO THE FOLLOWING:
I TO MAINTAIN THIS DOCUMENT IN CONFIDENCE
II NOT TO REPRODUCE OR COPY IT
III NOT TO REVEAL OR PUBLISH IT IN WHOLE OR PART
IV ALL RIGHTS RESERVED